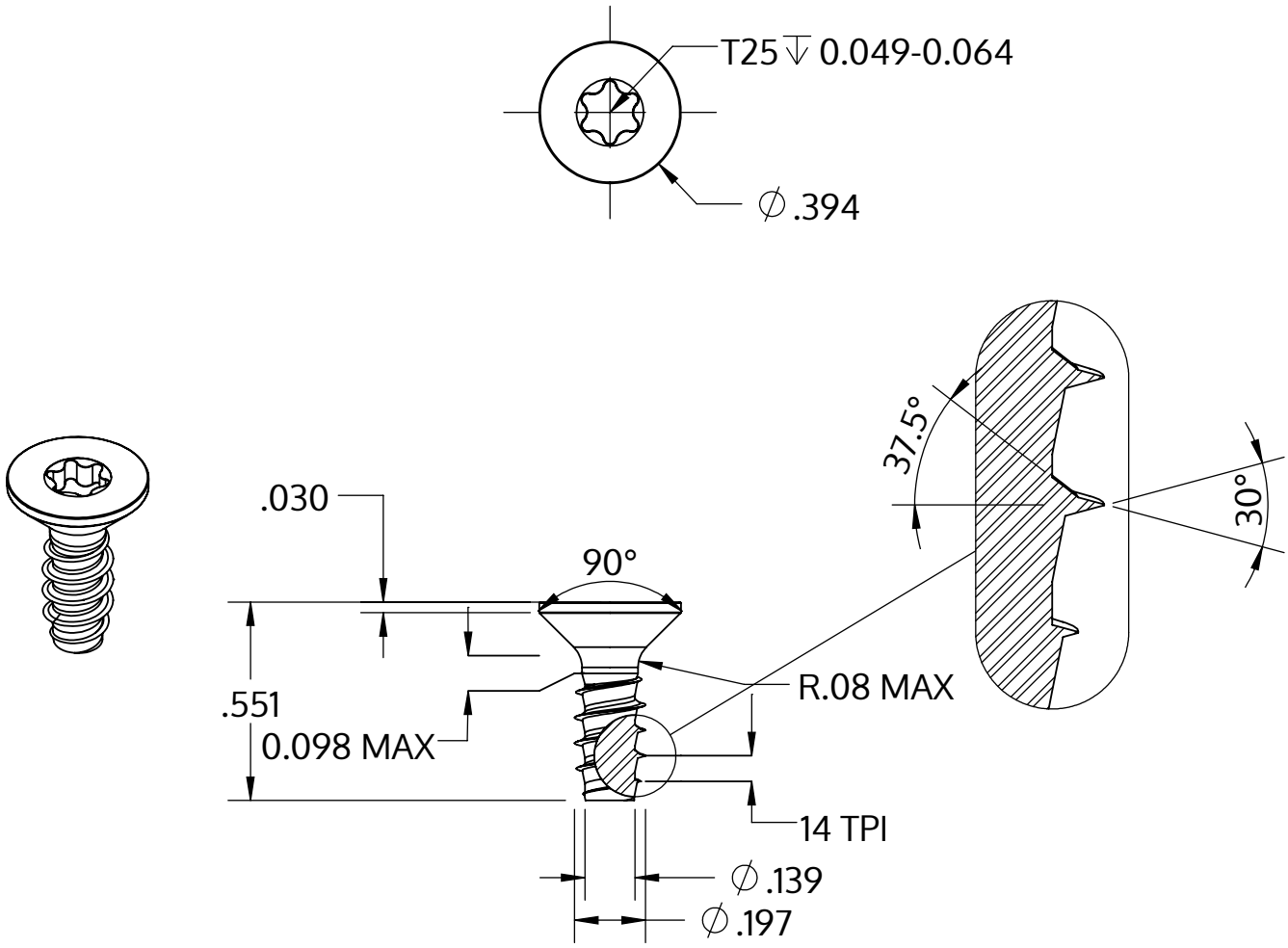

Metric size	M5 x 1.8 mm
US size (converted)	#11-14
	Tolerances [inch]
Length	+/- 0.021
Head diameter	+0 / -0.014
Head height	
Thread diameter	+0.005 / -0

Beskrivning	STP41 5.0x14.0 - T25
Material	rostfritt stål A4
Yta	blank och passiviserad
Vikt	2.039 kg / 1000 styck

SCREWERK	**STP410500140C**	
_Zoll Zeichnung Größe A	Skala None:1	2024-05