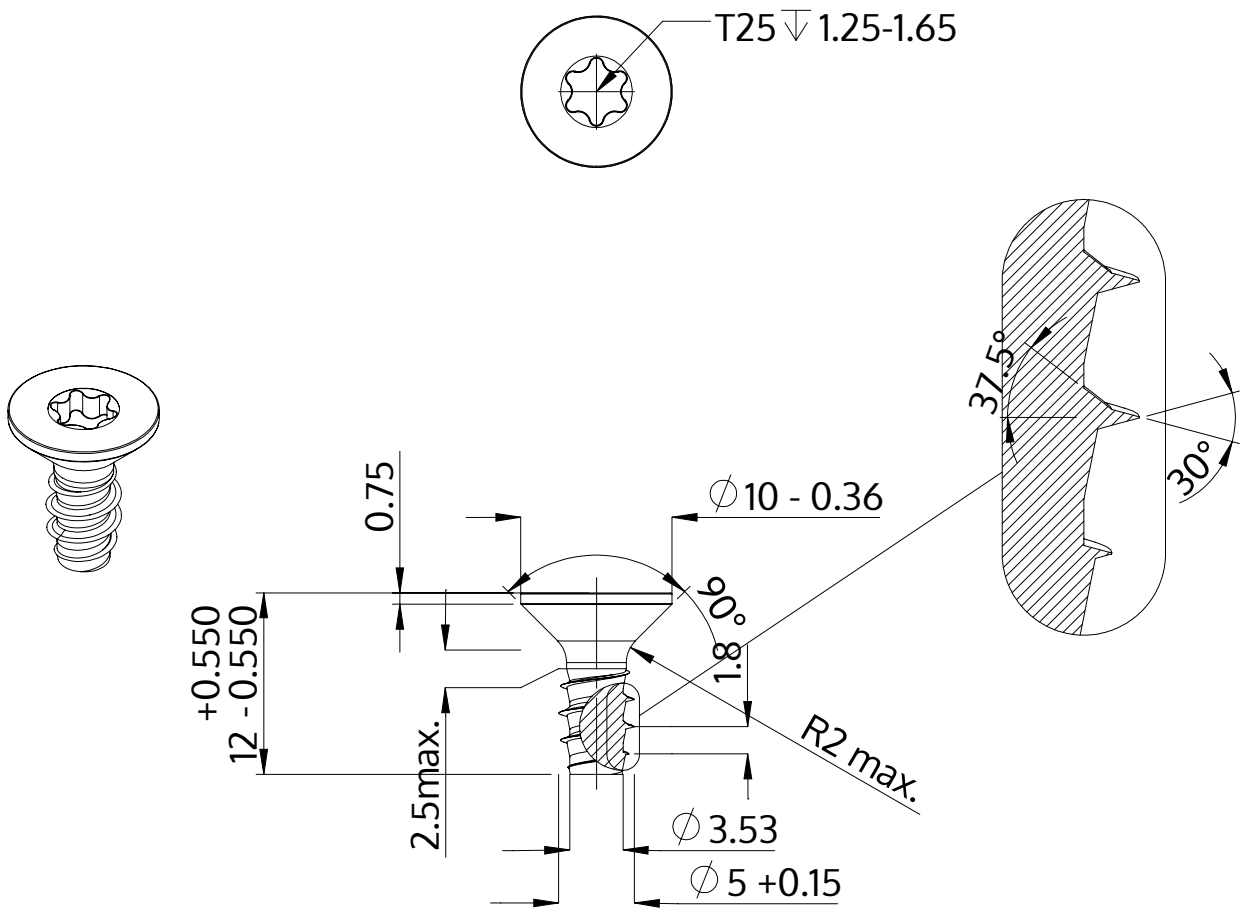


| | |
|---|---|
| Description | STP41 5.0x12.0 - T25 |
| Material | steel, hardened |
| Surface | zinc-plated 5-7 µm, baked, blue / transparent passivated |
| Weight | 1.850 kg / 1000 pieces |

| | | |
|---|---|---|
| SCREWERK | **STP410500120S** | |
| Metric Drawing A4 | Scale 2:1 | 2024-10 |