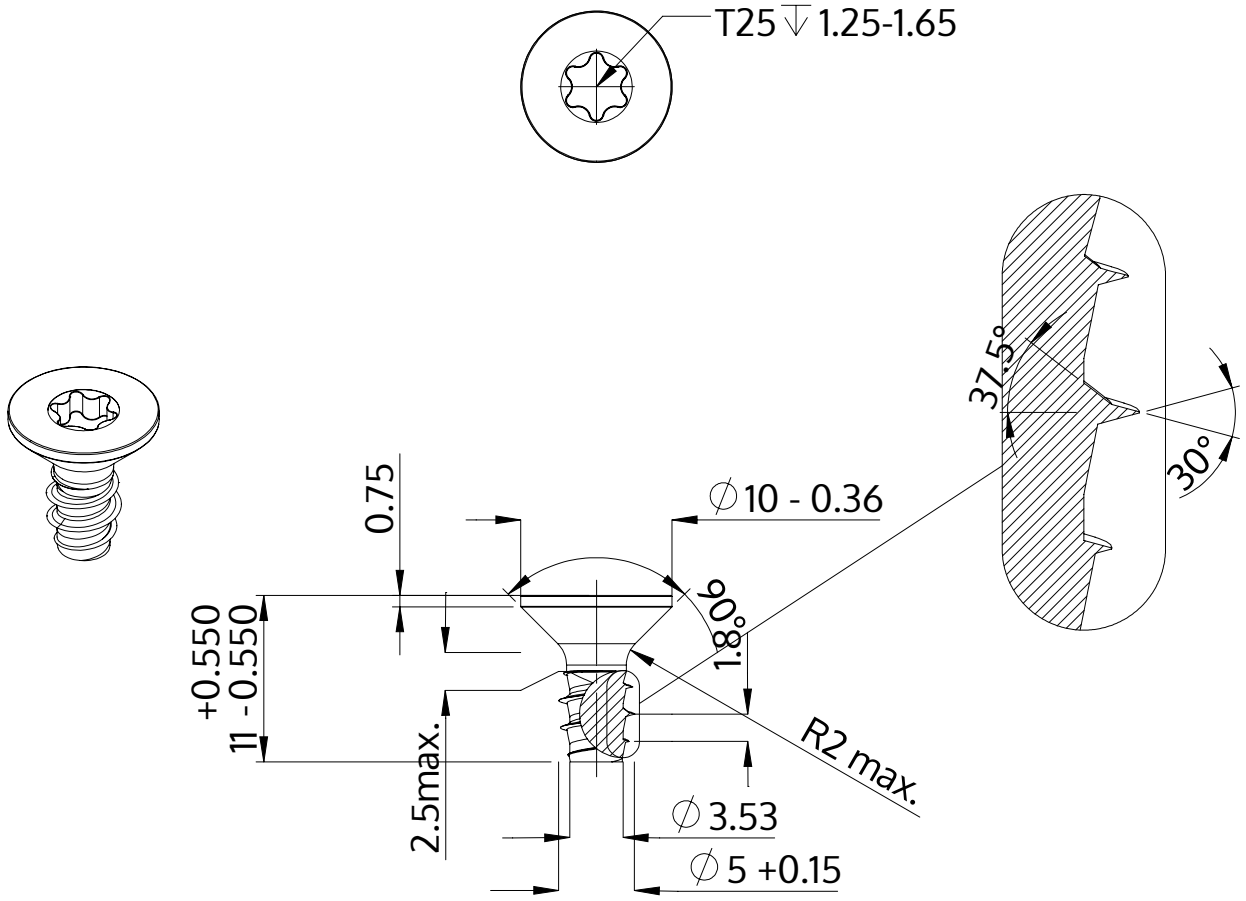

Description	STP41 5.0x11.0 - T25
Material	steel, hardened
Surface	Zinc-Nickel-plated min. 5µm, passivated black/ Cr-VI-free, baked, sealed
Weight	1.755 kg / 1000 pieces

SCREWERK	**STP410500110B**	
Metric Drawing A4	Scale 2:1	2024-10