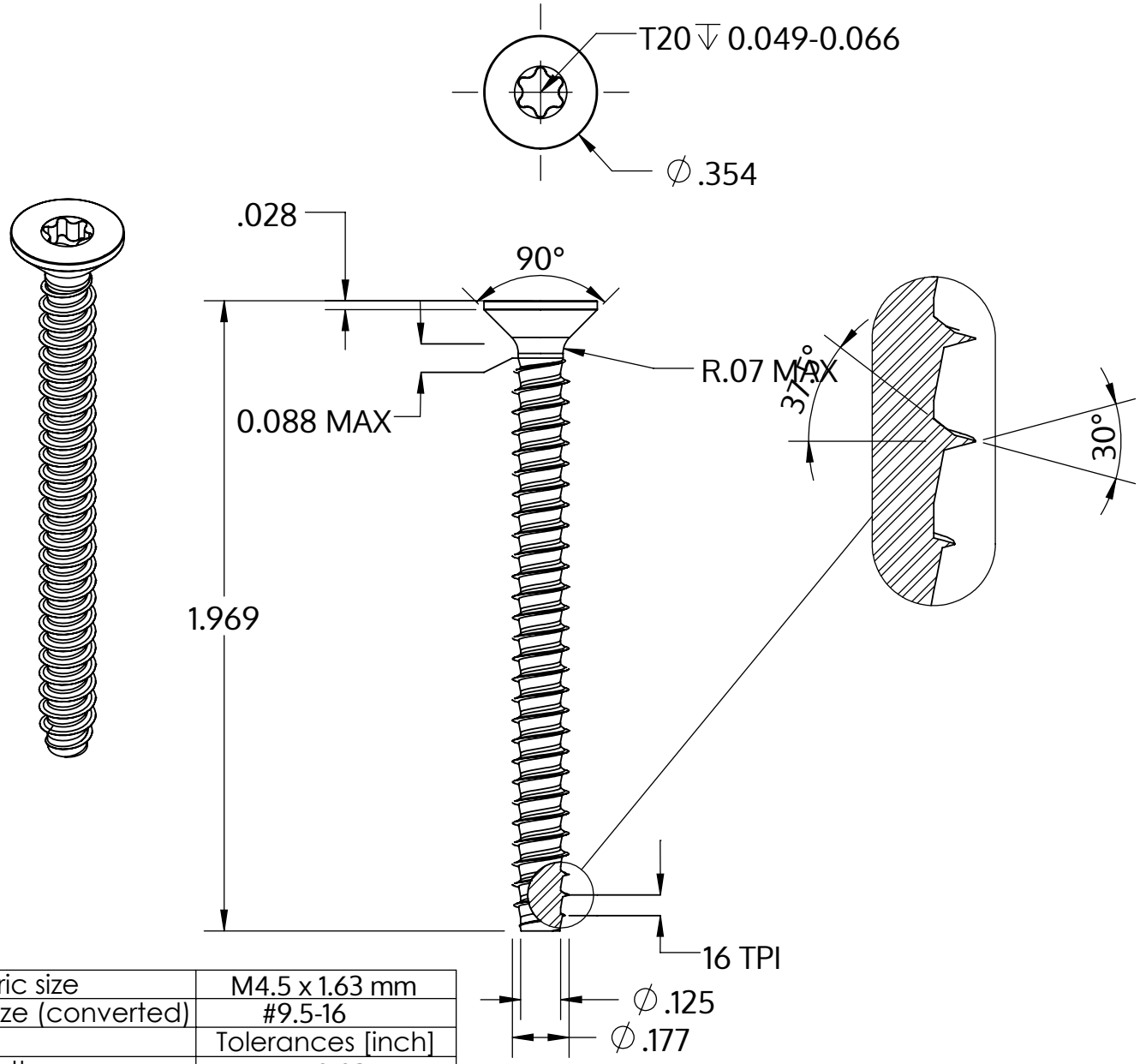

Metric size	M4.5 x 1.63 mm
US size (converted)	#9.5-16
	Tolerances [inch]
Length	+/- 0.031
Head diameter	+0 / -0.014
Head height	
Thread diameter	+0.003 / -0

Description	STP41 4.5x50.0 - T20
Material	stainless-steel A2
Surface	bright, pickled and passivated
Weight	4.398 kg / 1000 pieces

SCREWERK

STP410450500E

Inch Drawing Size A	Scale 2:1	2024-10