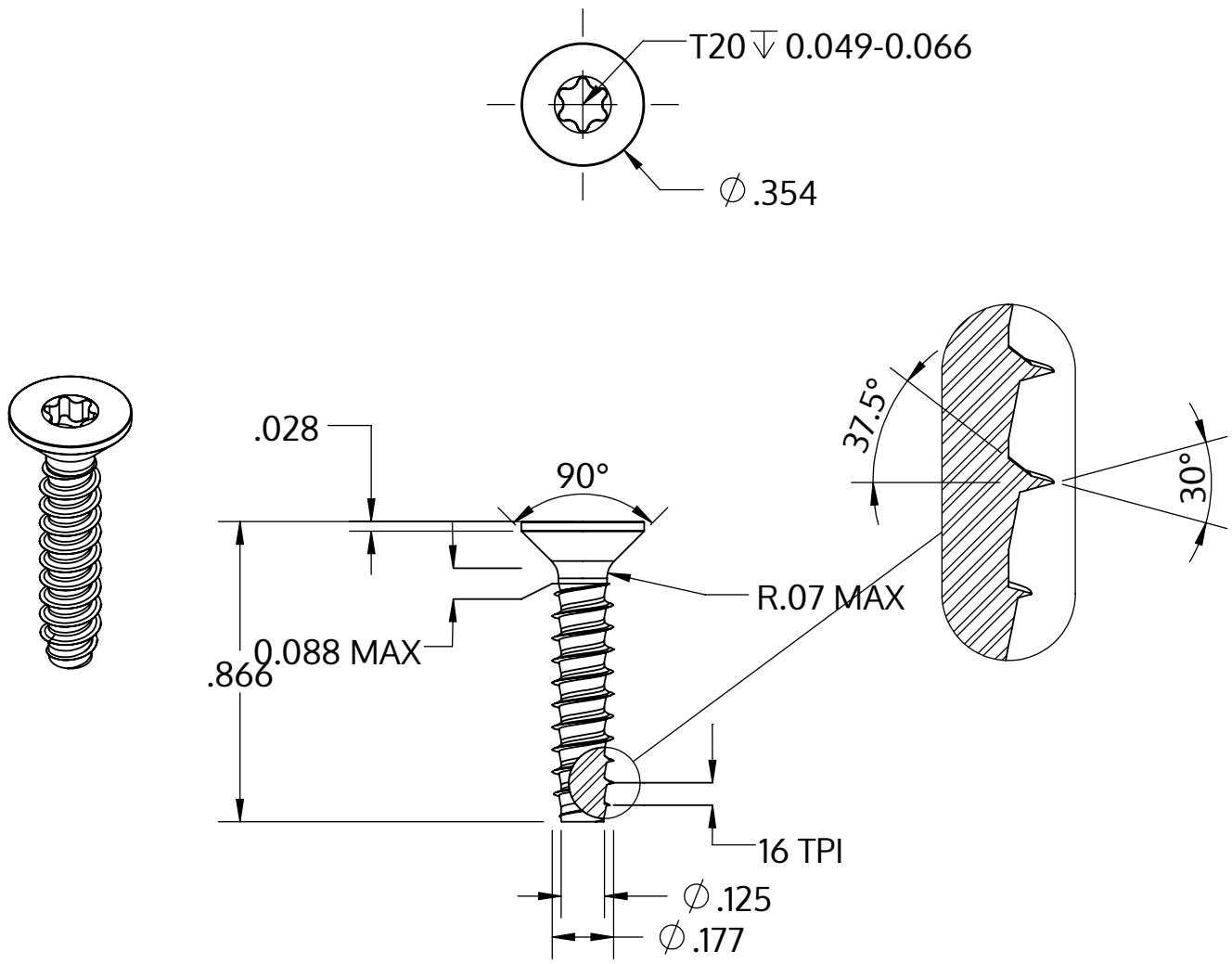

Metric size	M4.5 x 1.63 mm
US size (converted)	#9.5-16
	Tolerances [inch]
Length	+/- 0.025
Head diameter	+0 / -0.014
Head height	
Thread diameter	+0.003 / -0

Descriere	STP41 4.5x22.0 - T20
Material	oțel, călit
Exterior	zincat 5-7 µm, recopt, pasivat transparent/albastru
Greutate	2.245 kg / 1000 unități

SCREWERK	**STP410450220S**	
_Zoll Zeichnung Größe A	Scalarea 2:1	2024-10