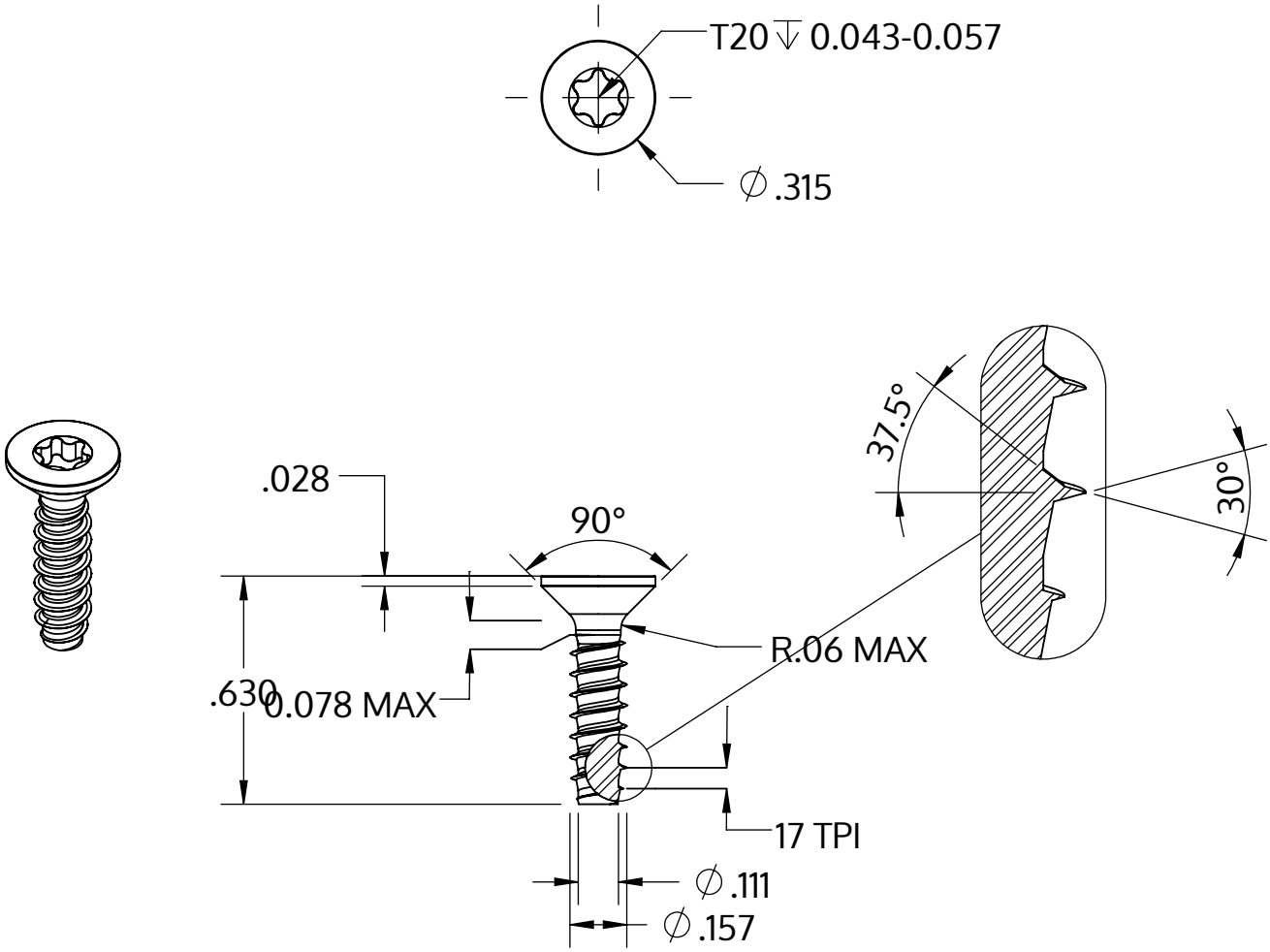

Metric size	M4 x 1.46 mm
US size (converted)	#8-17
	Tolerances [inch]
Length	+/- 0.021
Head diameter	+0 / -0.014
Head height	
Thread diameter	+0.003 / -0

Descriere	STP41 4.0x16.0 - T20
Material	oțel, călit
Exterior	zincat, Nichelat, pasivat negru / nu conține Cr-VI, recopt, ermetizat
Greutate	1.325 kg / 1000 unități

SCREWERK	**STP410400160B**	
_Zoll Zeichnung Größe A	Scalarea 2:1	2024-10