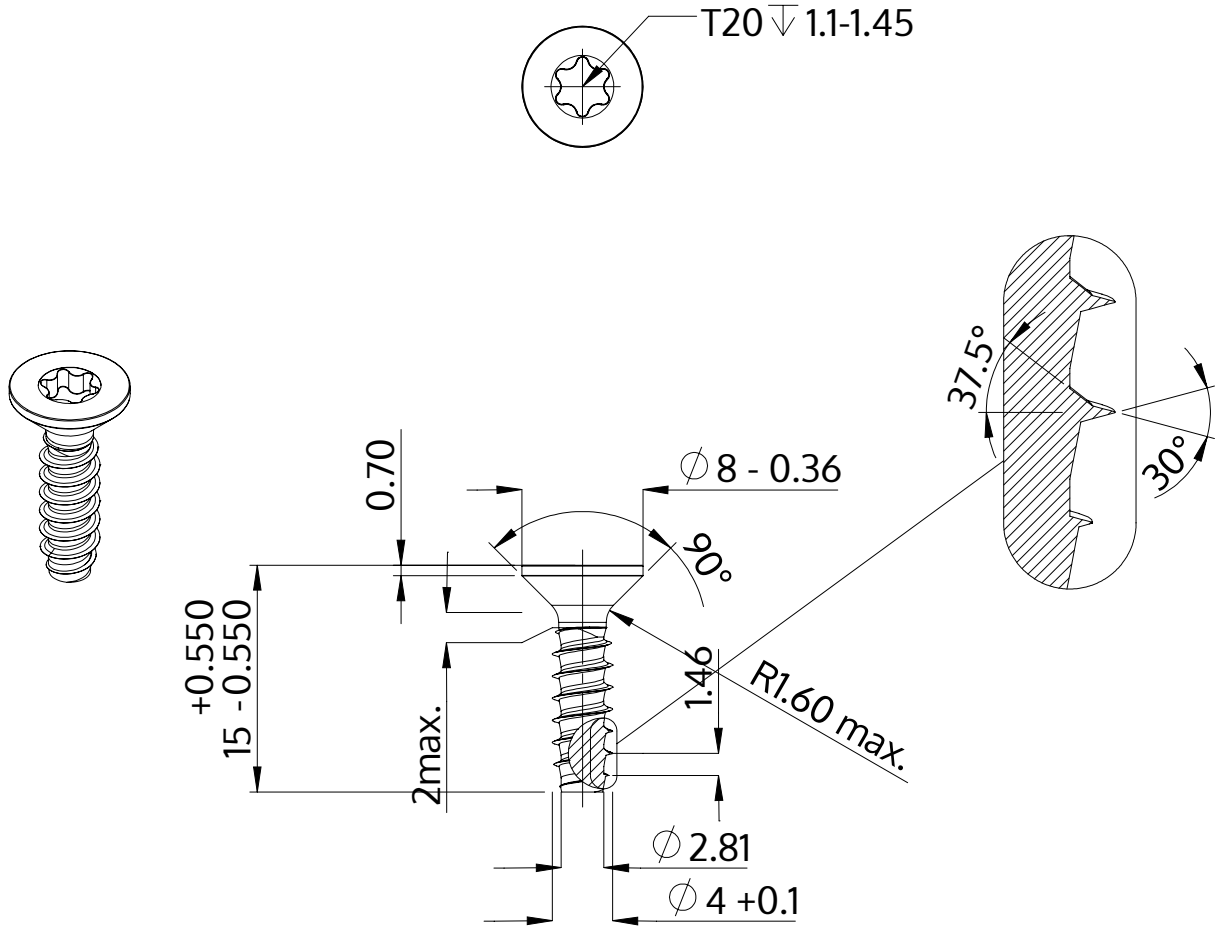

Description	STP41 4.0x15.0 - T20
Material	stainless-steel A2
Surface	bright, pickled and passivated
Weight	1.264 kg / 1000 pieces

SCREWERK	**STP410400150E**	
Metric Drawing A4	Scale 2:1	2024-10