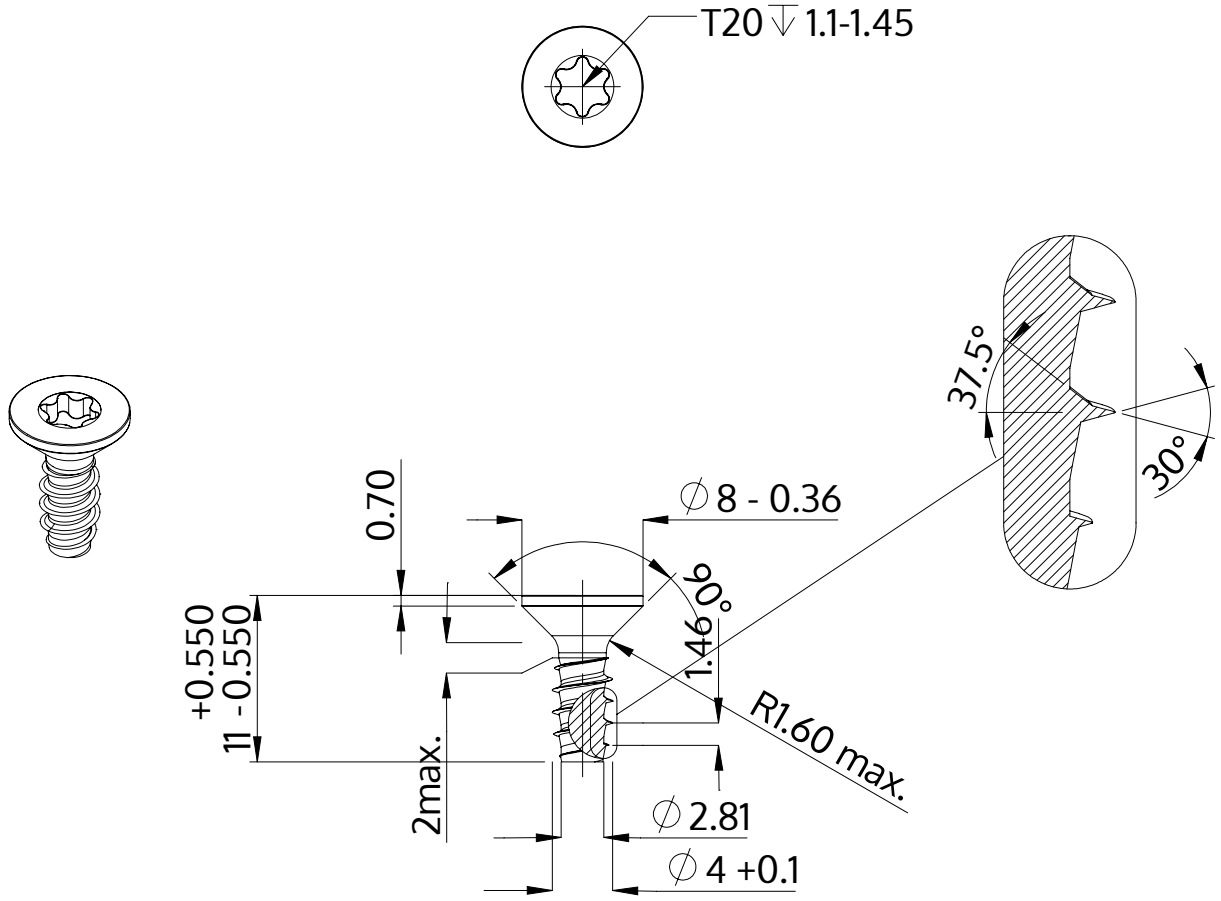

Description	STP41 4.0x11.0 - T20
Material	steel, hardened
Surface	zinc-plated 5-7 µm, baked, blue / transparent passivated
Weight	1.017 kg / 1000 pieces

SCREWERK	**STP410400110S**	
Metric Drawing A4	Scale 2:1	2024-10