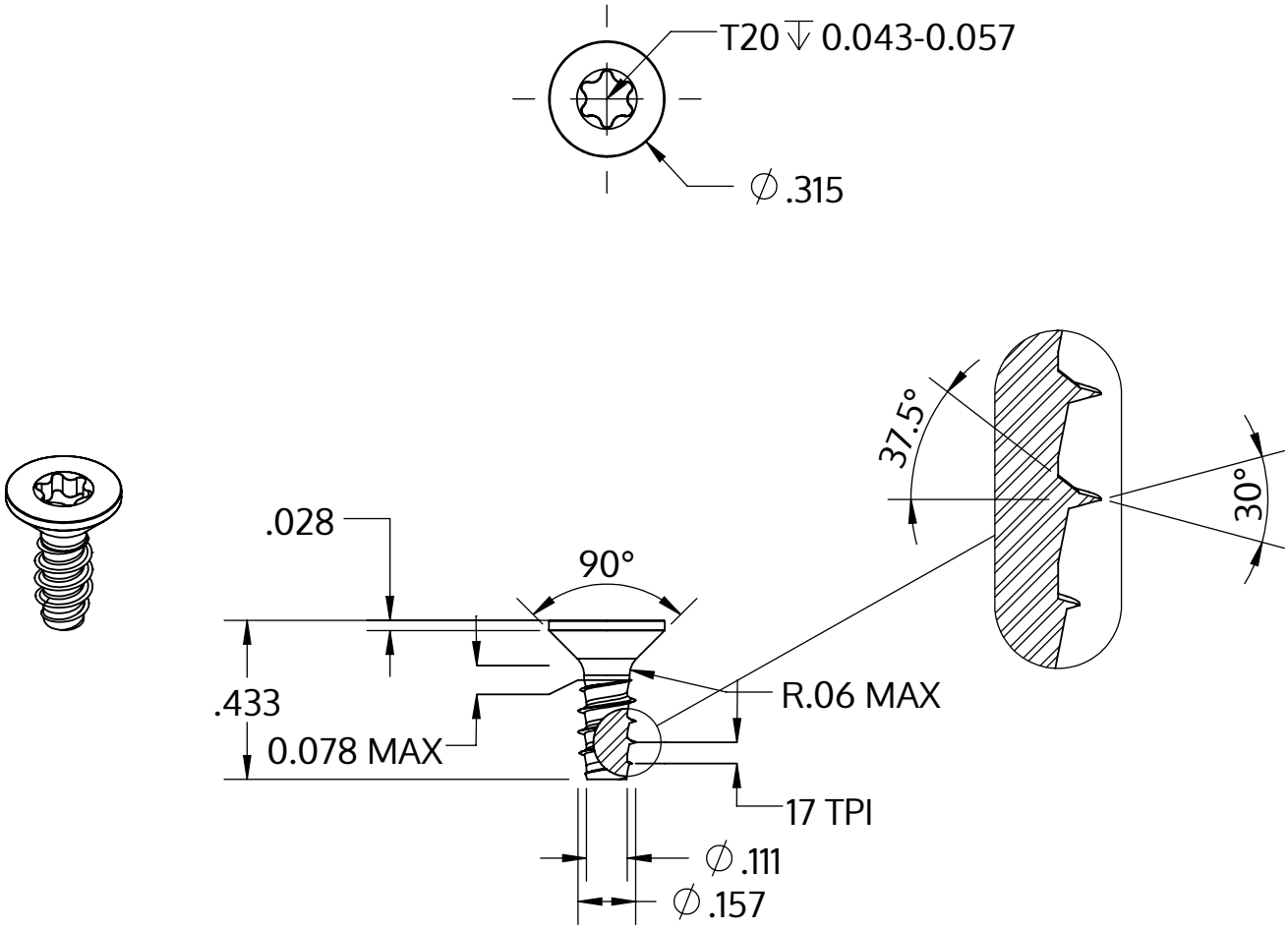

Metric size	M4 x 1.46 mm
US size (converted)	#8-17
	Tolerances [inch]
Length	+/- 0.021
Head diameter	+0 / -0.014
Head height	
Thread diameter	+0.003 / -0

Description	STP41 4.0x11.0 - T20
Material	steel, hardened
Surface	Zinc-Nickel-plated min. 5µm, passivated black/ Cr-VI-free, baked, sealed
Weight	1.017 kg / 1000 pieces

SCREWERK	**STP410400110B**	
Inch Drawing Size A	Scale 2:1	2024-10