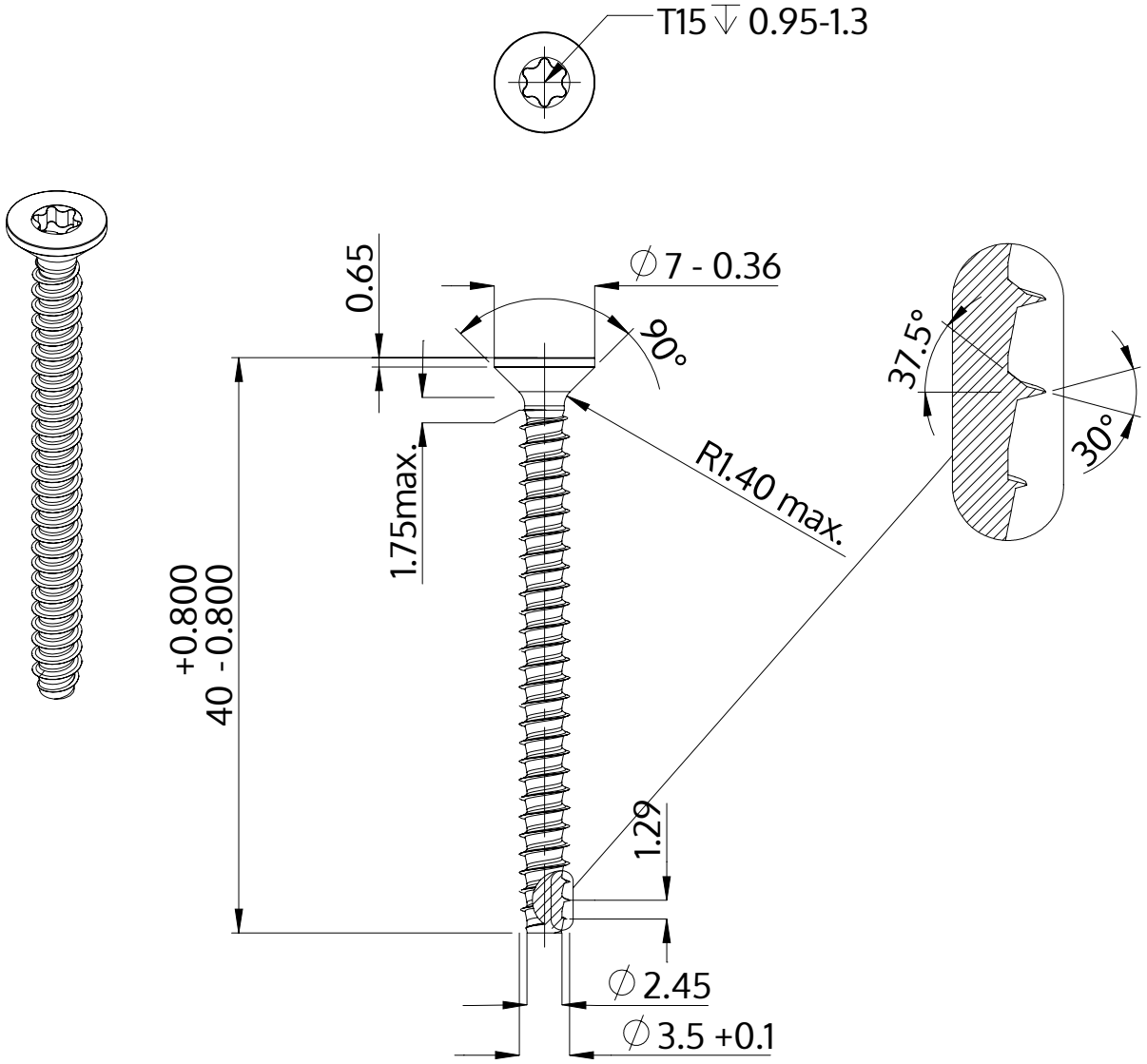

Description	STP41 3.5x40.0 - T15
Material	steel, hardened
Surface	zinc-plated 5-7 µm, baked, blue / transparent passivated
Weight	2.084 kg / 1000 pieces

SCREWERK	**STP410350400S**	
Metric Drawing A4	Scale 2:1	2024-10