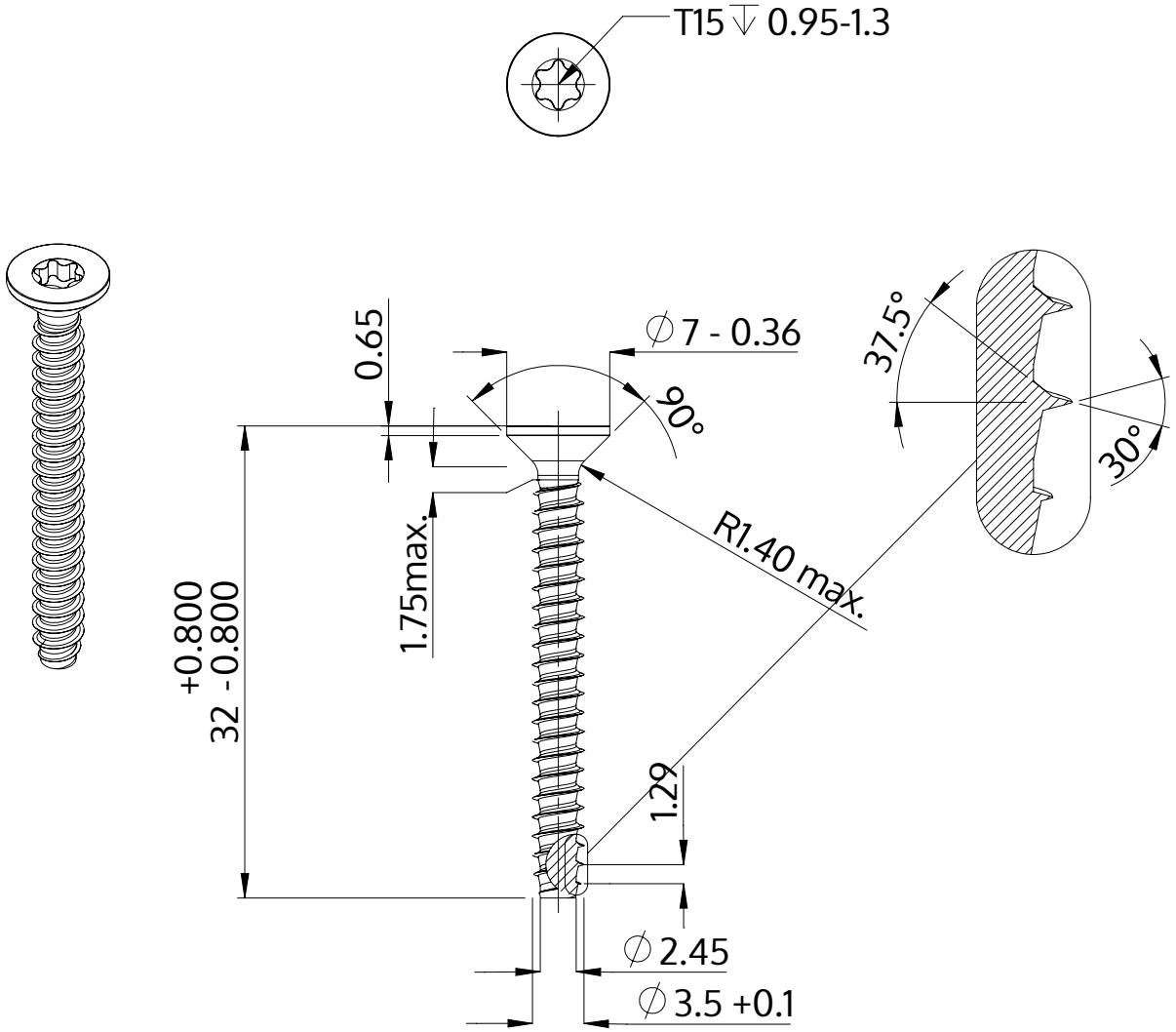

Description	STP41 3.5x32.0 - T15
Material	stainless-steel A2
Surface	bright, pickled and passivated
Weight	1.706 kg / 1000 pieces

SCREWERK	**STP410350320E**	
Metric Drawing A4	Scale 2:1	2024-10