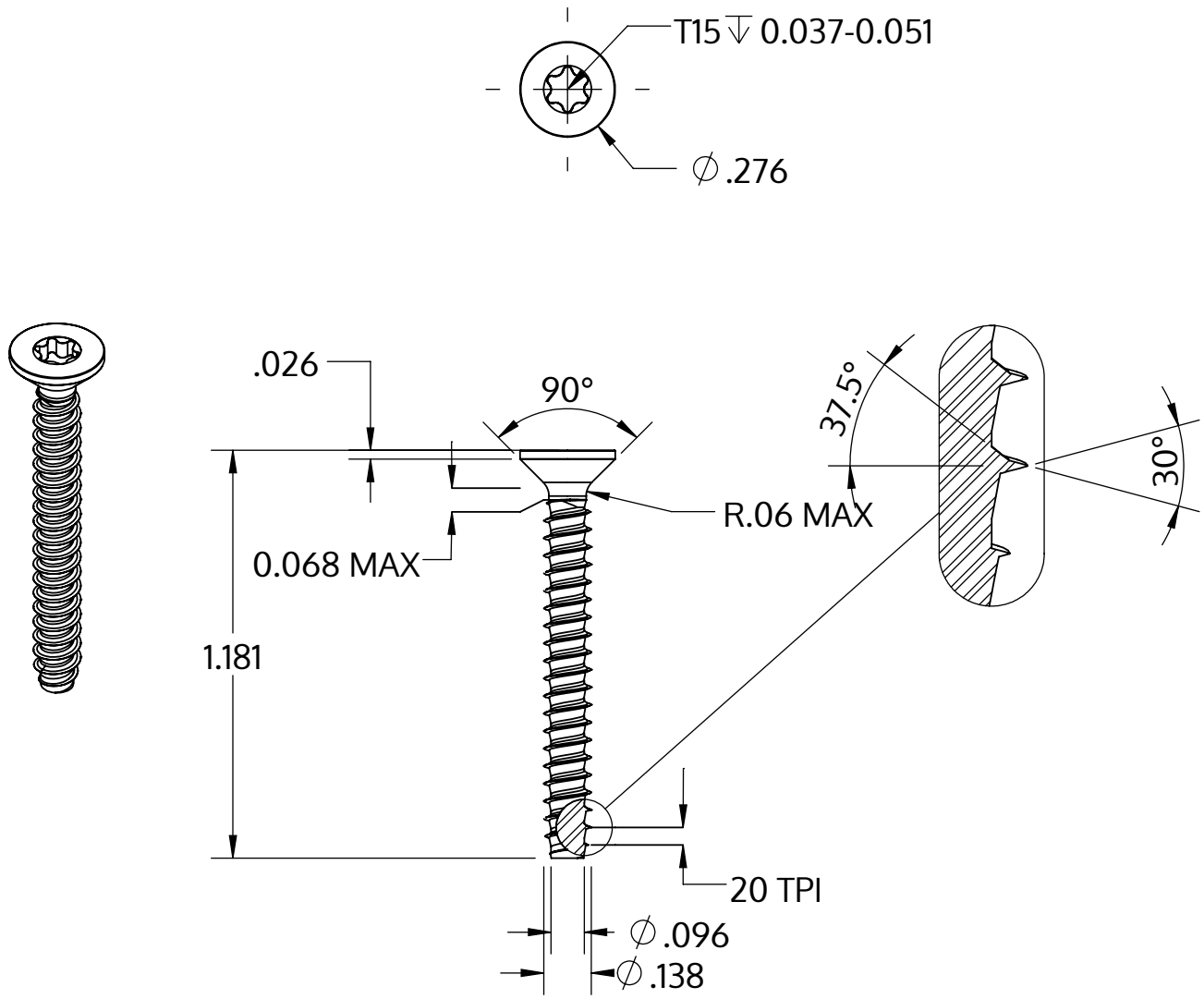

Metric size	M3.5 x 1.29 mm
US size (converted)	#6-20
	Tolerances [inch]
Length	+/- 0.025
Head diameter	+0 / -0.014
Head height	
Thread diameter	+0.003 / -0

Description	STP41 3.5x30.0 - T15
Material	stainless-steel A2
Surface	bright, pickled and passivated
Weight	1.611 kg / 1000 pieces

SCREWERK

STP410350300E

Inch Drawing Size A	Scale 2:1	2024-10