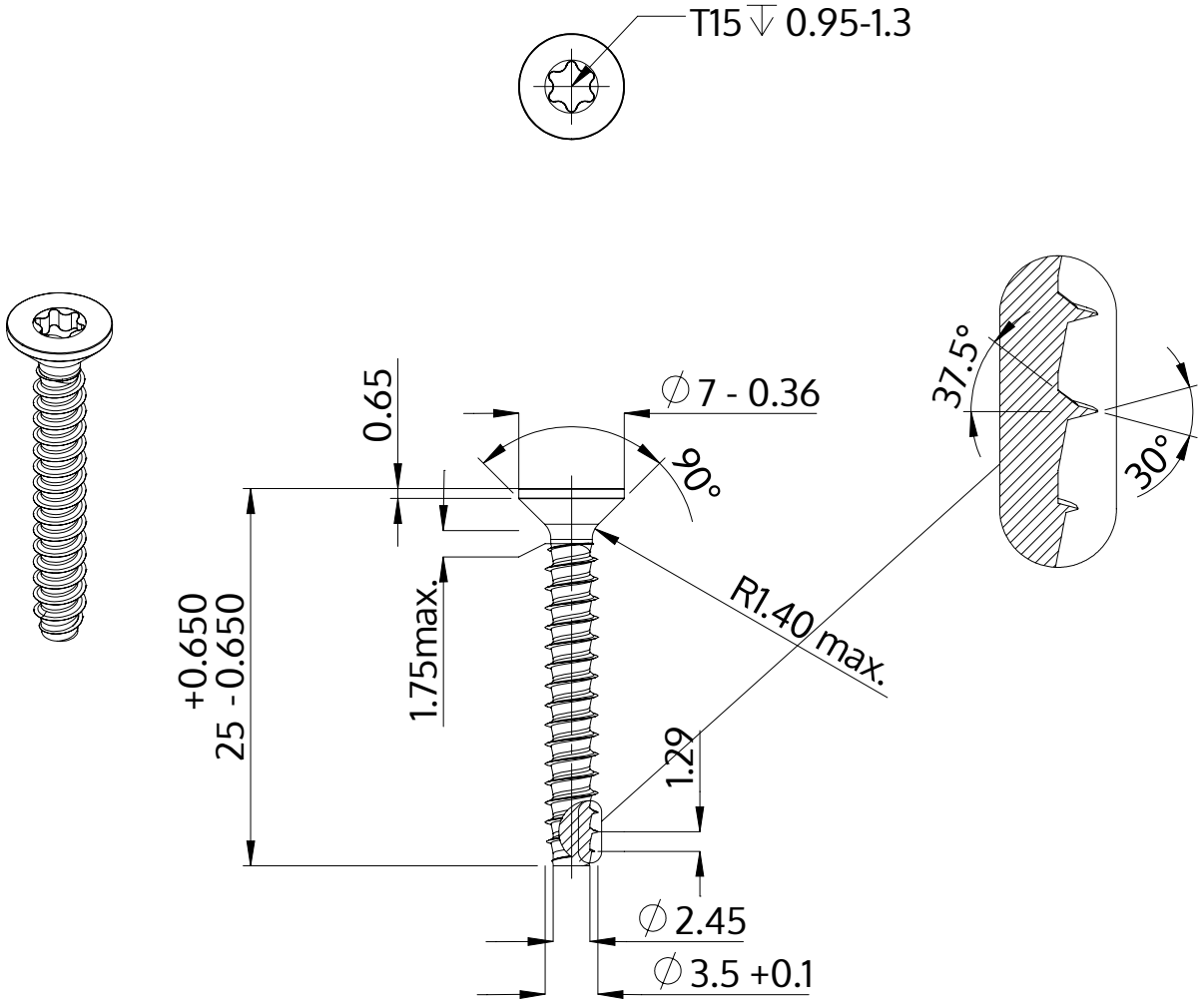

Description	STP41 3.5x25.0 - T15
Material	stainless steel A4
Surface	bright, pickled and passivated
Weight	1.375 kg / 1000 pieces

SCREWERK	**STP410350250C**	
Metric Drawing A4	Scale None:1	2024-04