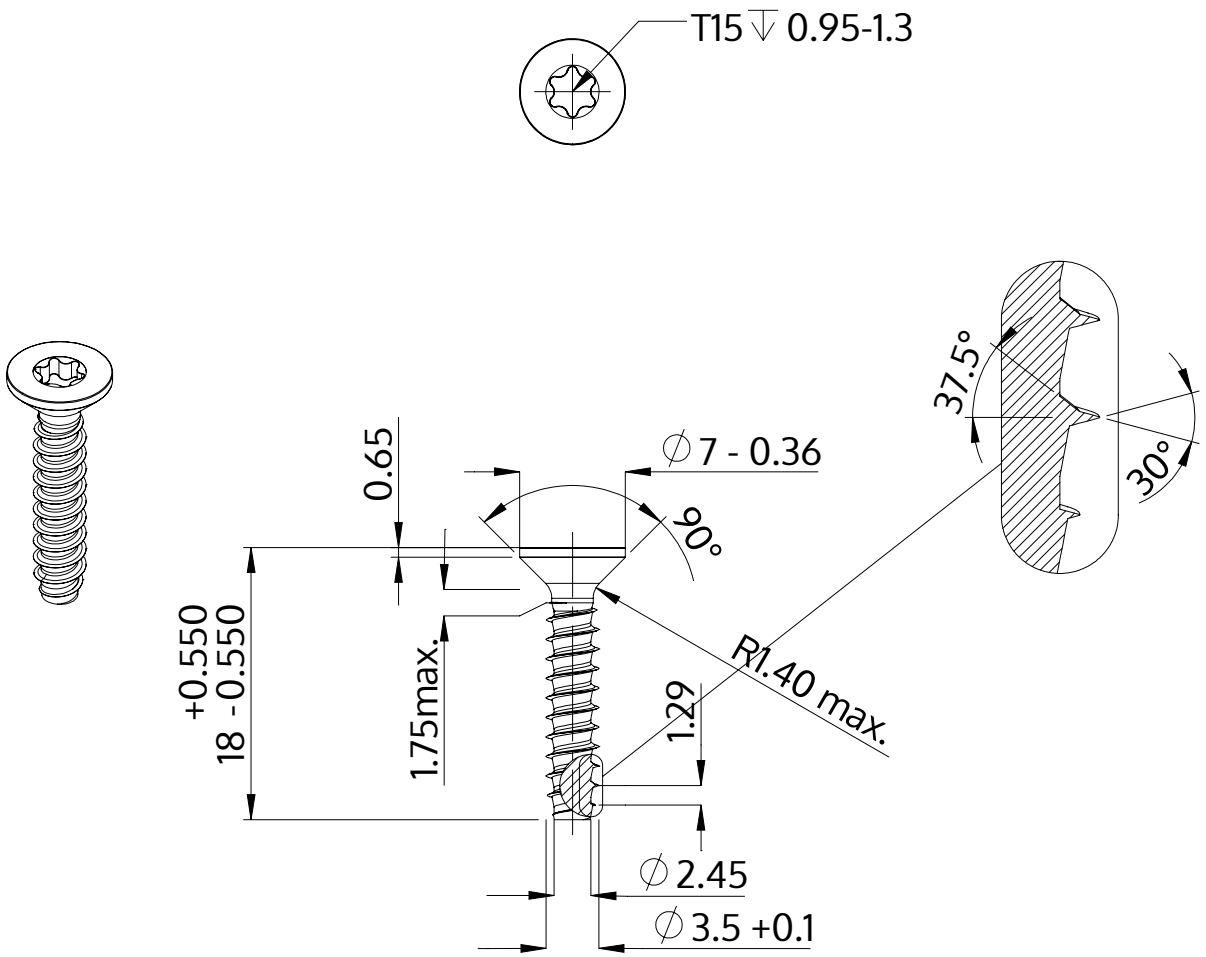

Description	STP41 3.5x18.0 - T15
Material	stainless steel A4
Surface	bright, pickled and passivated
Weight	1.044 kg / 1000 pieces

SCREWERK	**STP410350180C**	
Metric Drawing A4	Scale 2:1	2024-10