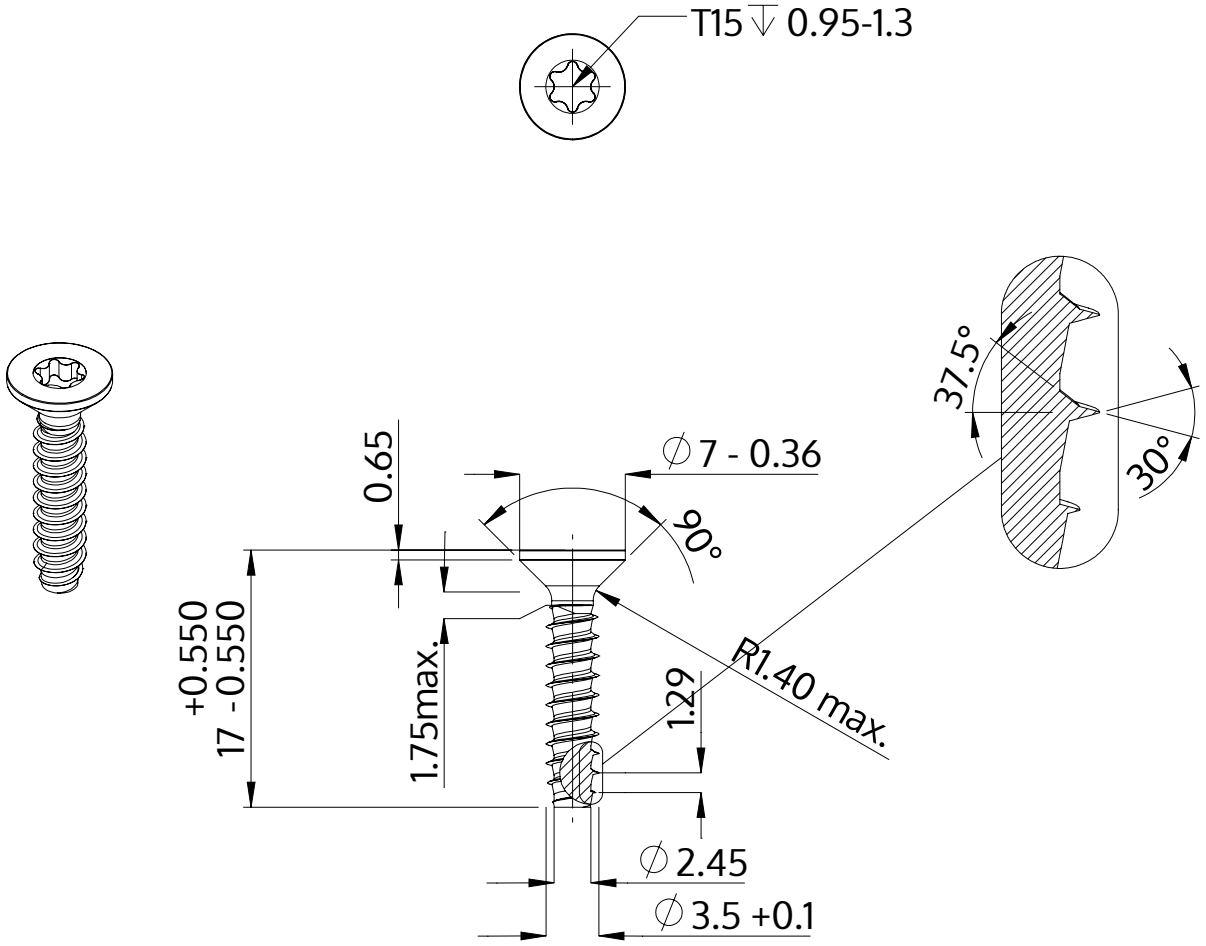

Description	STP41 3.5x17.0 - T15
Material	stainless steel A4
Surface	bright, pickled and passivated
Weight	0.997 kg / 1000 pieces

SCREWERK	**STP410350170C**	
Metric Drawing A4	Scale 2:1	2024-10