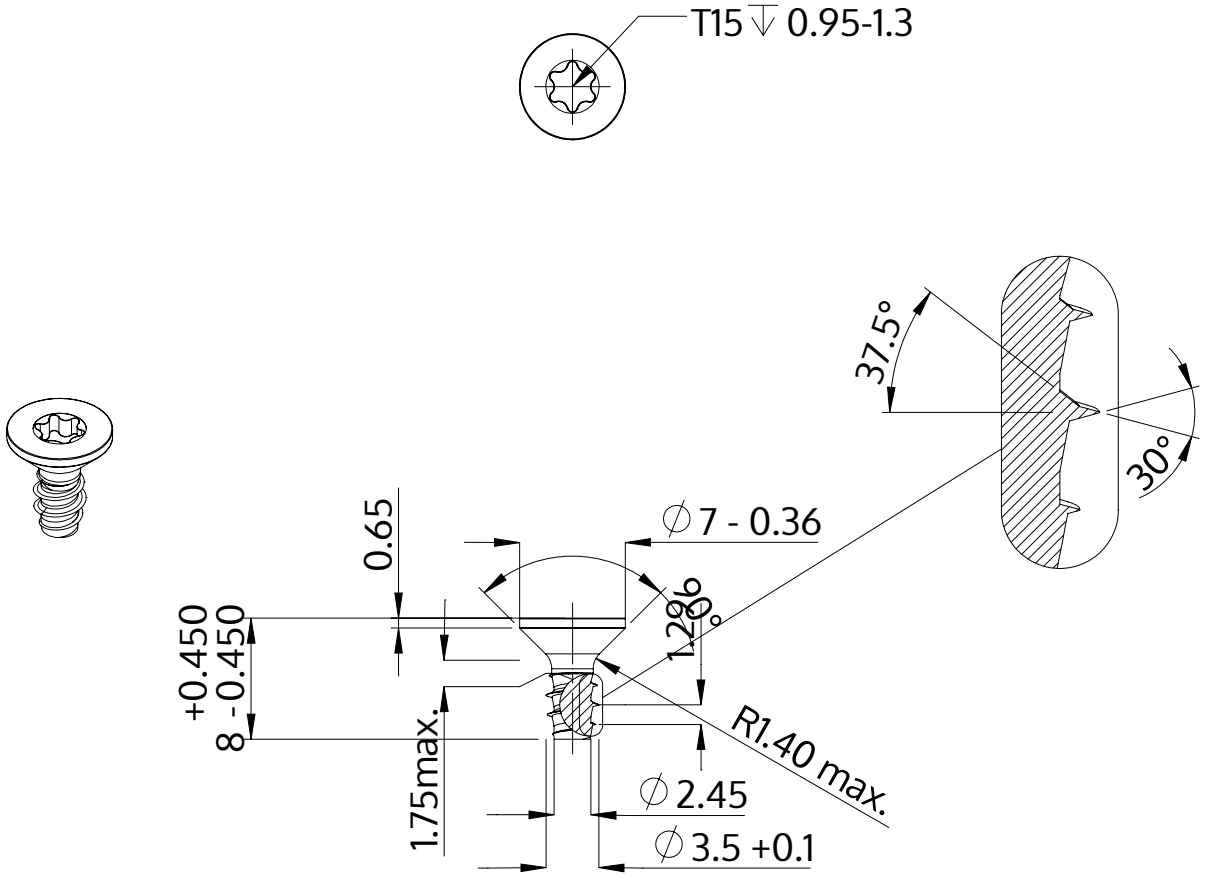

Description	STP41 3.5x8.0 - T15
Material	steel, hardened
Surface	zinc-plated 5-7 µm, baked, blue / transparent passivated
Weight	0.572 kg / 1000 pieces

SCREWERK	**STP410350080S**	
Metric Drawing A4	Scale 2:1	2024-10