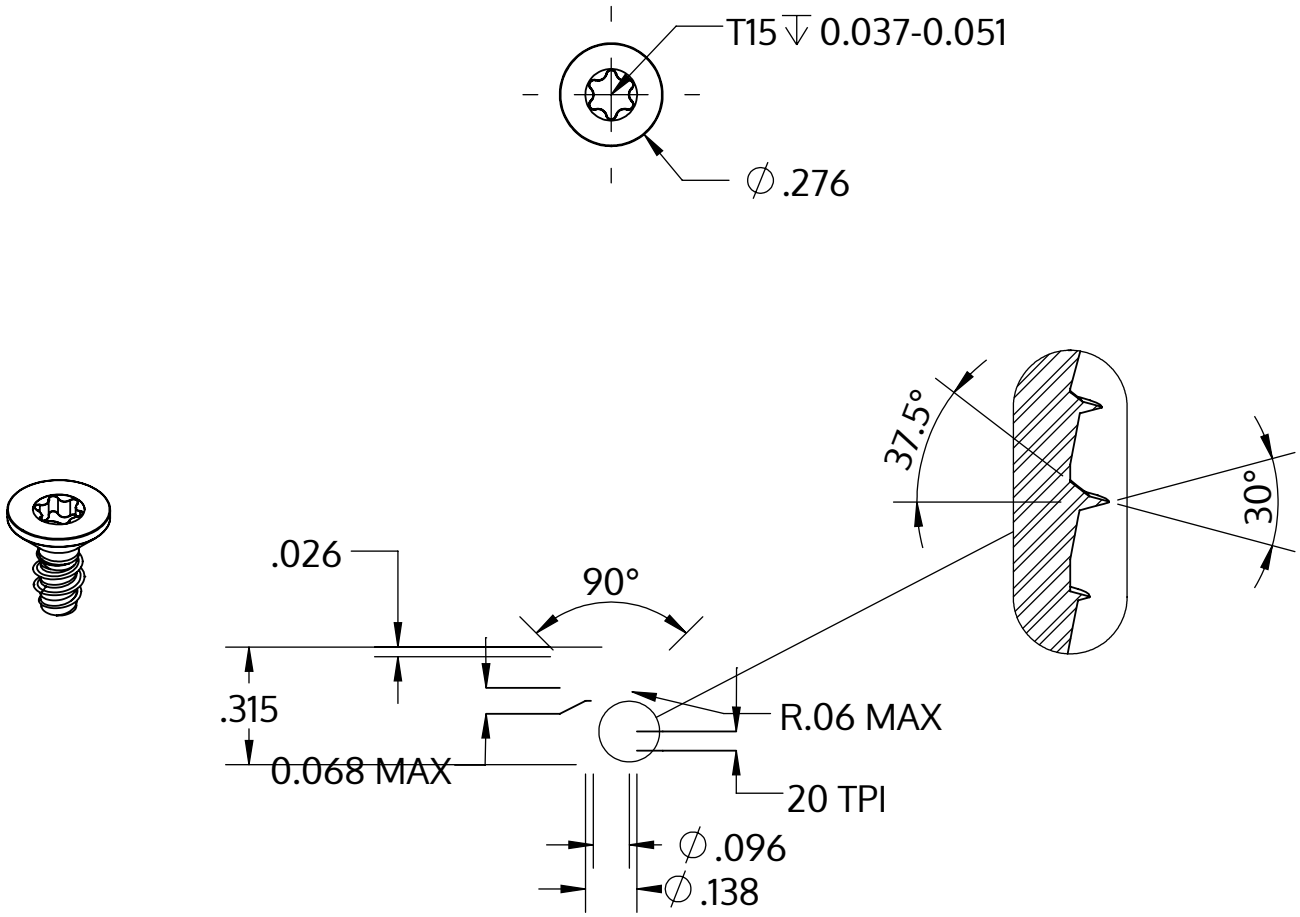

Metric size	M3.5 x 1.29 mm
US size (converted)	#6-20
	Tolerances [inch]
Length	+/- 0.017
Head diameter	+0 / -0.014
Head height	
Thread diameter	+0.003 / -0

Descriere	STP41 3.5x8.0 - T15
Material	oţel inoxidabil A2
Exterior	negru
Greutate	0.572 kg / 1000 unități

SCREWERK	**STP410350080J**	
_Zoll Zeichnung Größe A	Scalarea 2:1	2024-10