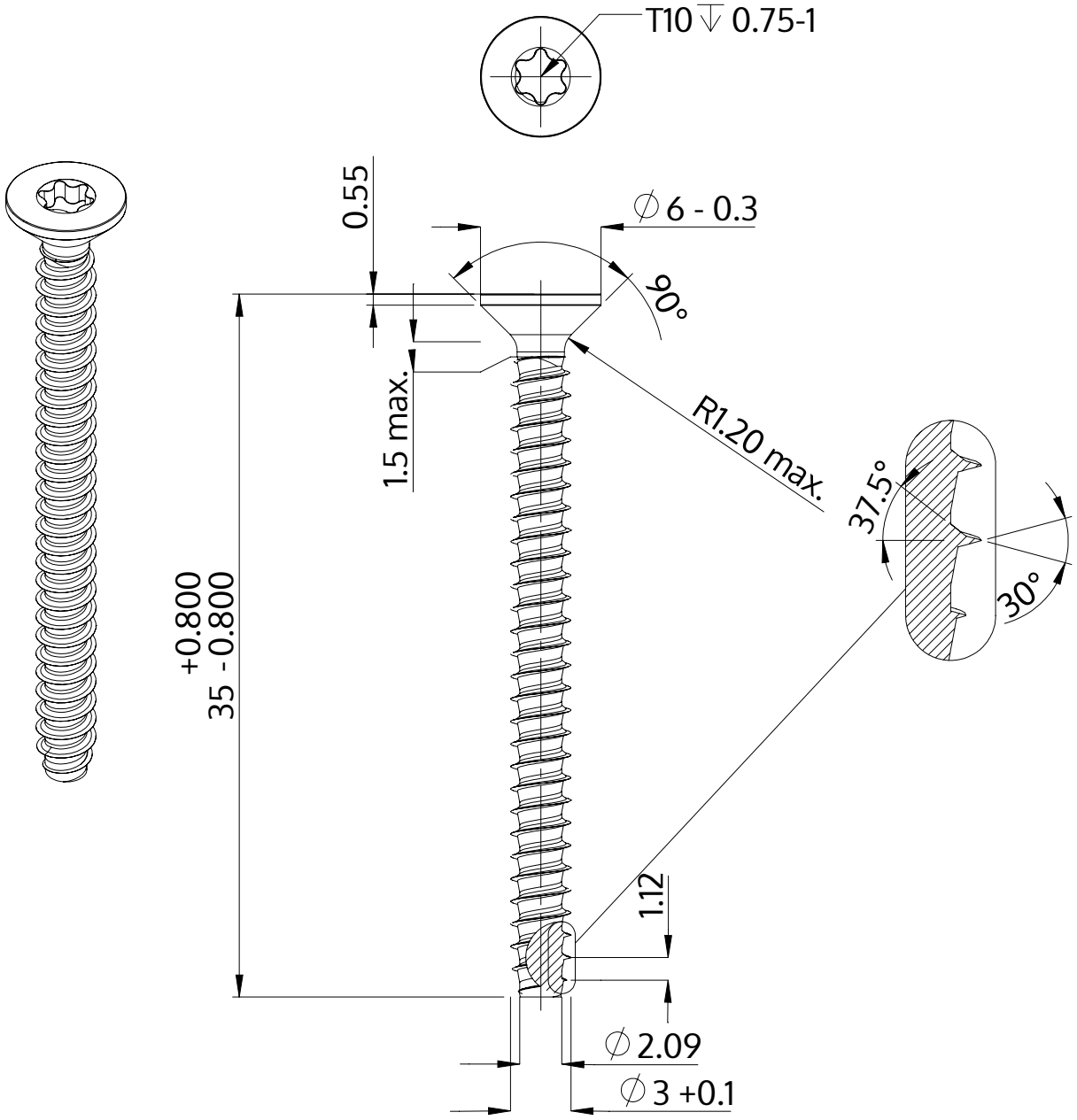

Description	STP41 3.0x35.0 - T10
Material	steel, hardened
Surface	Zinc-Nickel-plated min. 5µm, passivated black/ Cr-VI-free, baked, sealed
Weight	1.330 kg / 1000 pieces

SCREWERK	**STP410300350B**	
Metric Drawing A4	Scale None:1	2024-04