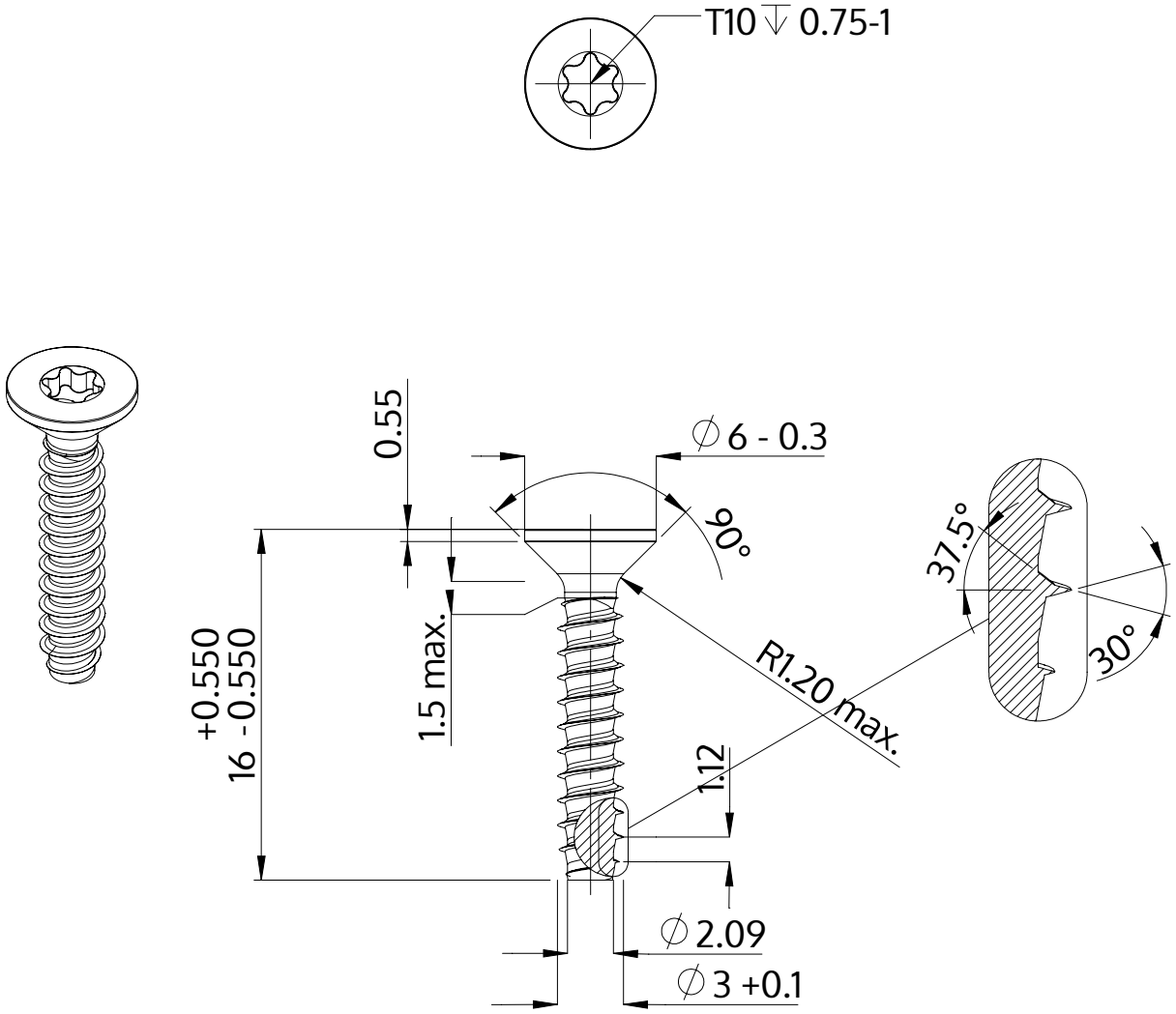

Description	STP41 3.0x16.0 - T10
Material	steel, hardened
Surface	zinc-plated 5-7 µm, baked, blue / transparent passivated
Weight	0.684 kg / 1000 pieces

SCREWERK	**STP410300160S**	
Metric Drawing A4	Scale 3:1	2024-10