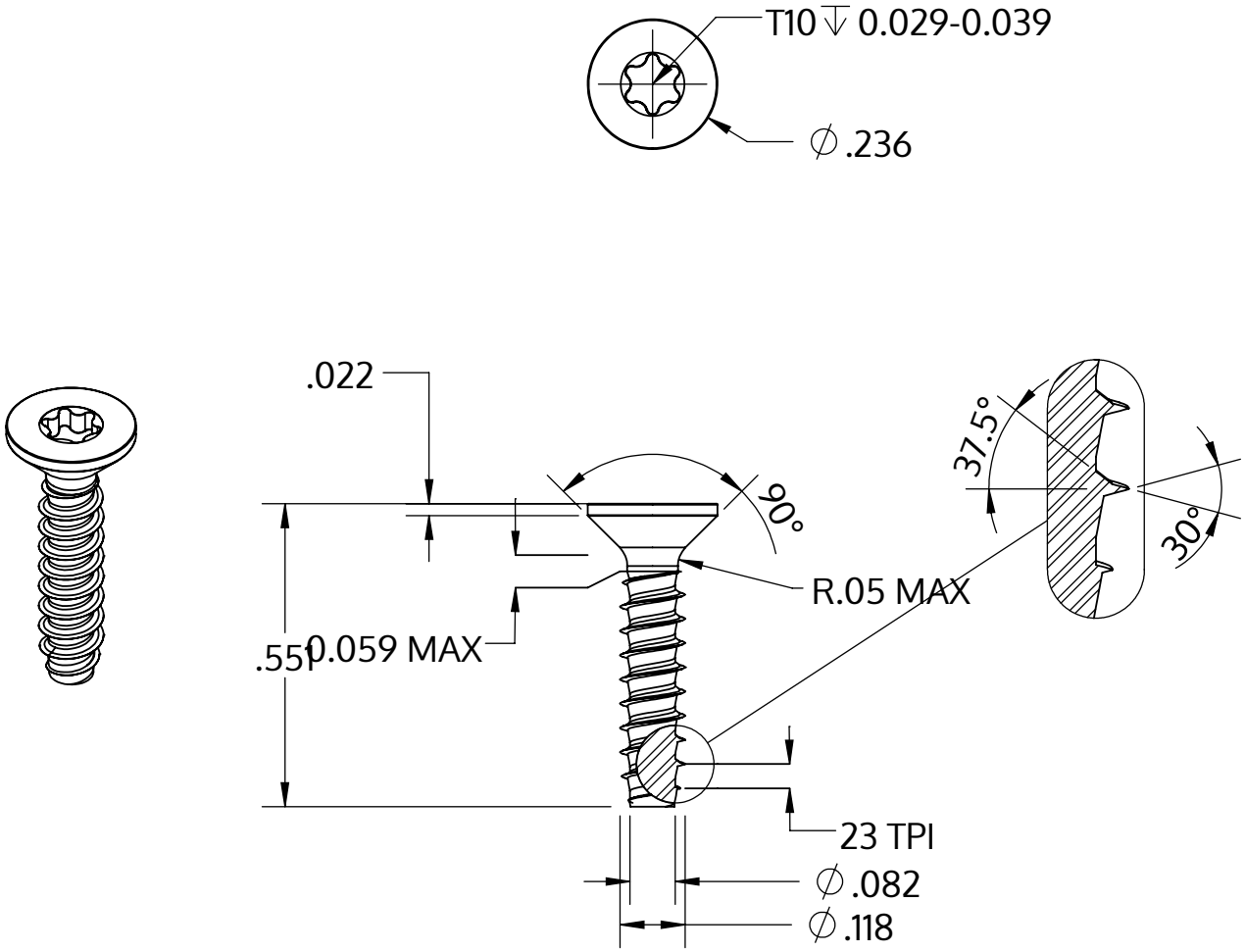

Metric size	M3 x 1.12 mm
US size (converted)	#4-23
	Tolerances [inch]
Length	+/- 0.021
Head diameter	+0 / -0.011
Head height	
Thread diameter	+0.003 / -0

Description	STP41 3.0x14.0 - T10
Material	stainless steel A4
Surface	bright, pickled and passivated
Weight	0.616 kg / 1000 pieces

SCREWERK	**STP410300140C**	
Inch Drawing Size A	Scale 3:1	2024-10