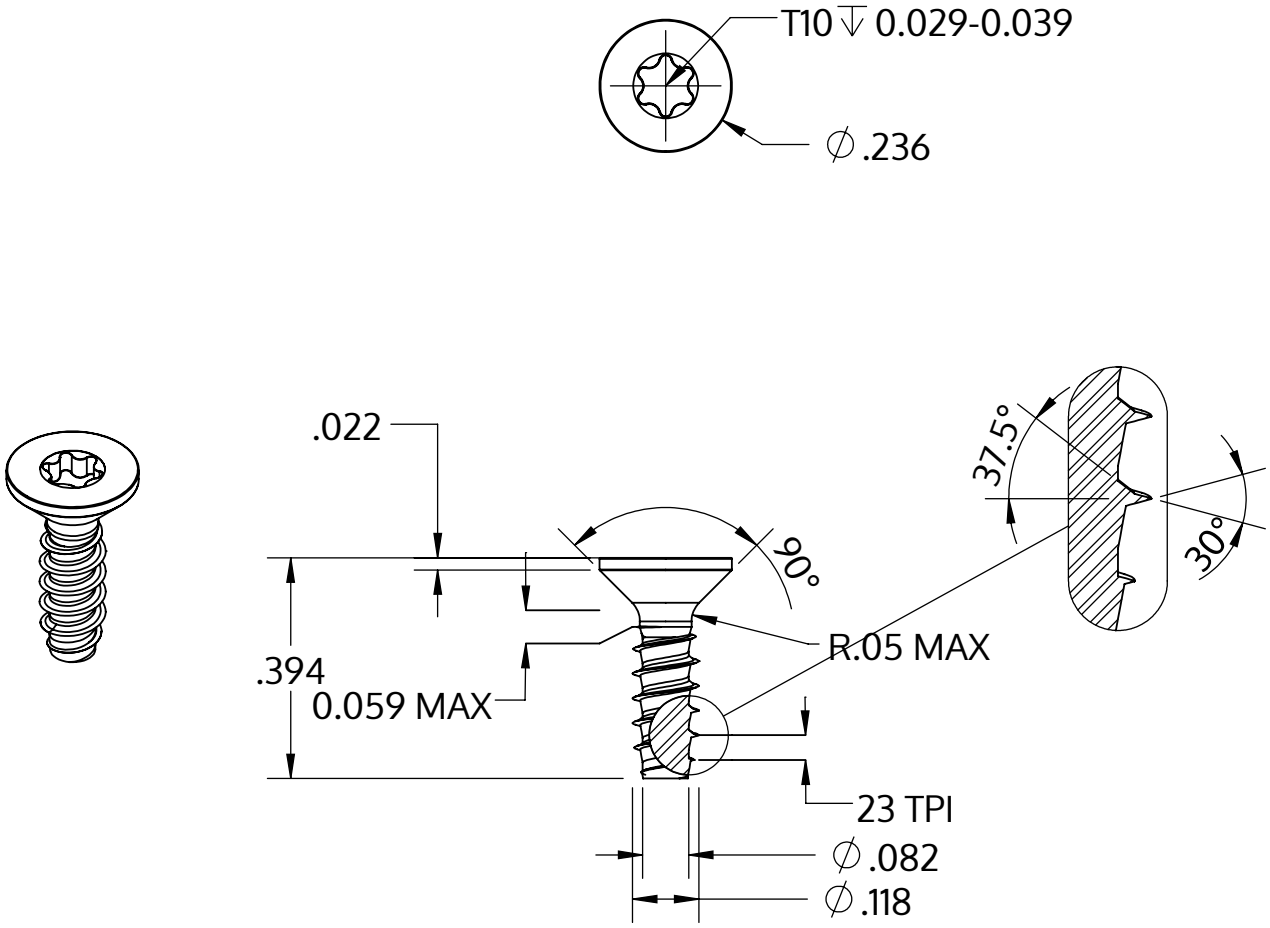

Metric size	M3 x 1.12 mm
US size (converted)	#4-23
	Tolerances [inch]
Length	+/- 0.017
Head diameter	+0 / -0.011
Head height	
Thread diameter	+0.003 / -0

Descripción	STP41 3.0x10.0 - T10
Material	Acero Inoxidable A2
Superficie	negro
Peso	0.480 kg / 1000 Piezas

SCREWERK	**STP410300100J**	
_Zoll Zeichnung Größe A	Escalada 3:1	2024-10