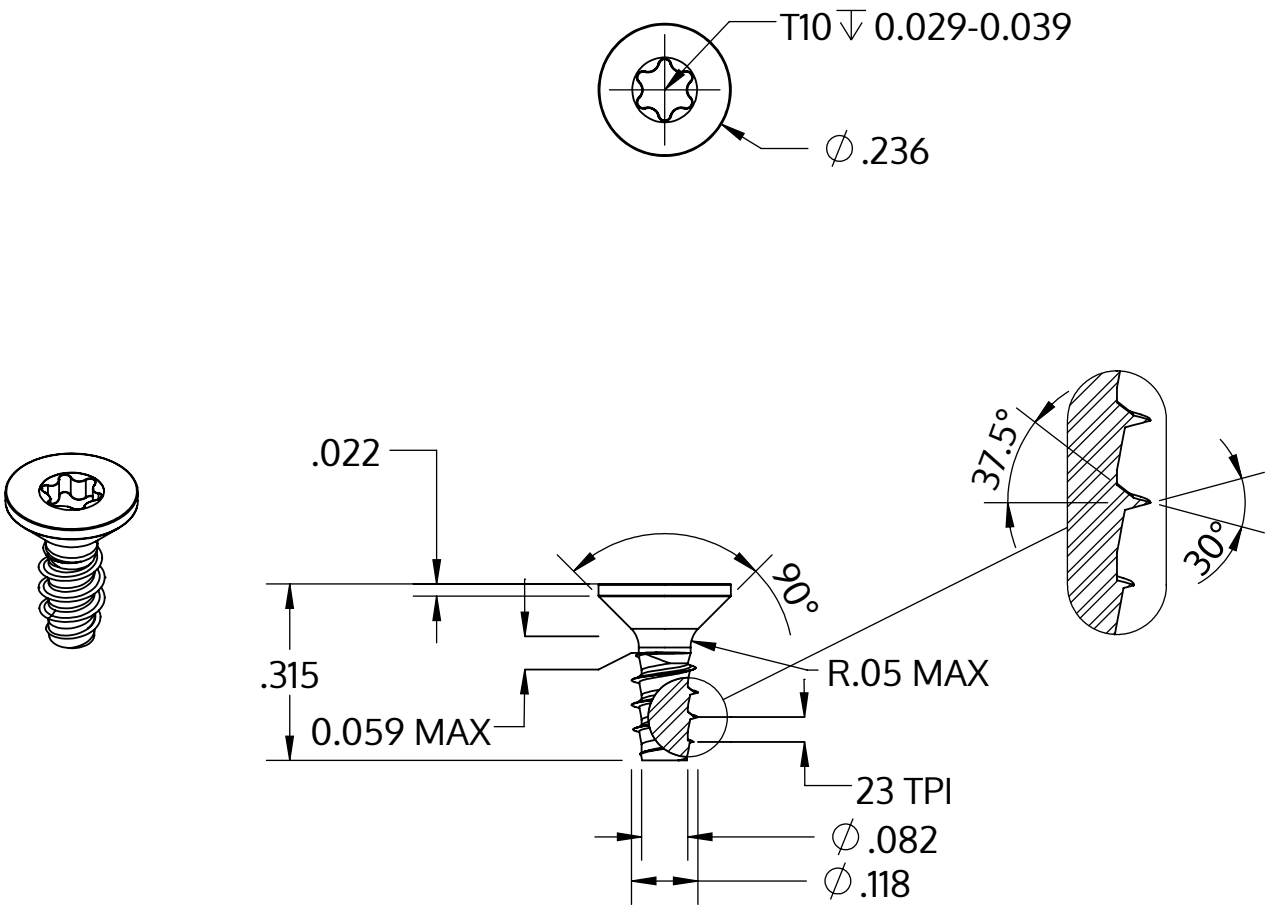


| | |
|---|---|
| Metric size | M3 x 1.12 mm |
| US size (converted) | #4-23 |
| | Tolerances [inch] |
| Length | +/- 0.017 |
| Head diameter | +0 / -0.011 |
| Head height | |
| Thread diameter | +0.003 / -0 |

| | |
|---|---|
| Opis | STP41 3.0x8.0 - T10 |
| Materiał | Stal szlachetna A2 |
| Powierzchnia | czarny |
| Waga | 0.413 kg / 1000 sztuk |

| | | |
|---|---|---|
| SCREWERK | **STP410300080J** | |
| _Zoll Zeichnung Größe A | Skala 3:1 | 2024-10 |