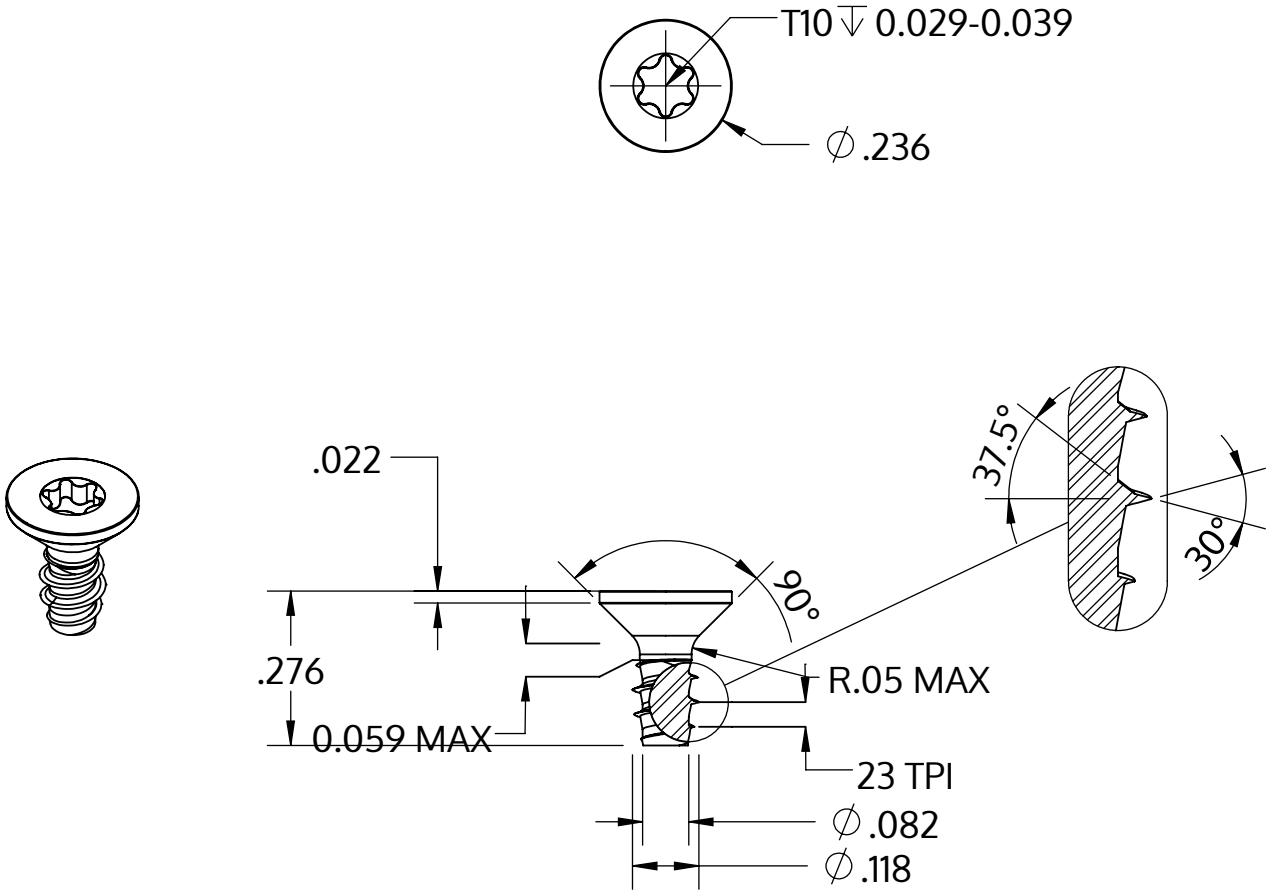


| | |
|---|---|
| Metric size | M3 x 1.12 mm |
| US size (converted) | #4-23 |
| | Tolerances [inch] |
| Length | +/- 0.017 |
| Head diameter | +0 / -0.011 |
| Head height | |
| Thread diameter | +0.003 / -0 |

| | |
|---|---|
| Description | STP41 3.0x7.0 - T10 |
| Matière | acier inoxydable A2 |
| Surface | brillant décapé et passivé |
| Poids | 0.379 kg / 1000 Unité |

| | | |
|---|---|---|
| SCREWERK | **STP410300070E** | |
| _Zoll Zeichnung Größe A | Redimensionner 3:1 | 2024-10 |