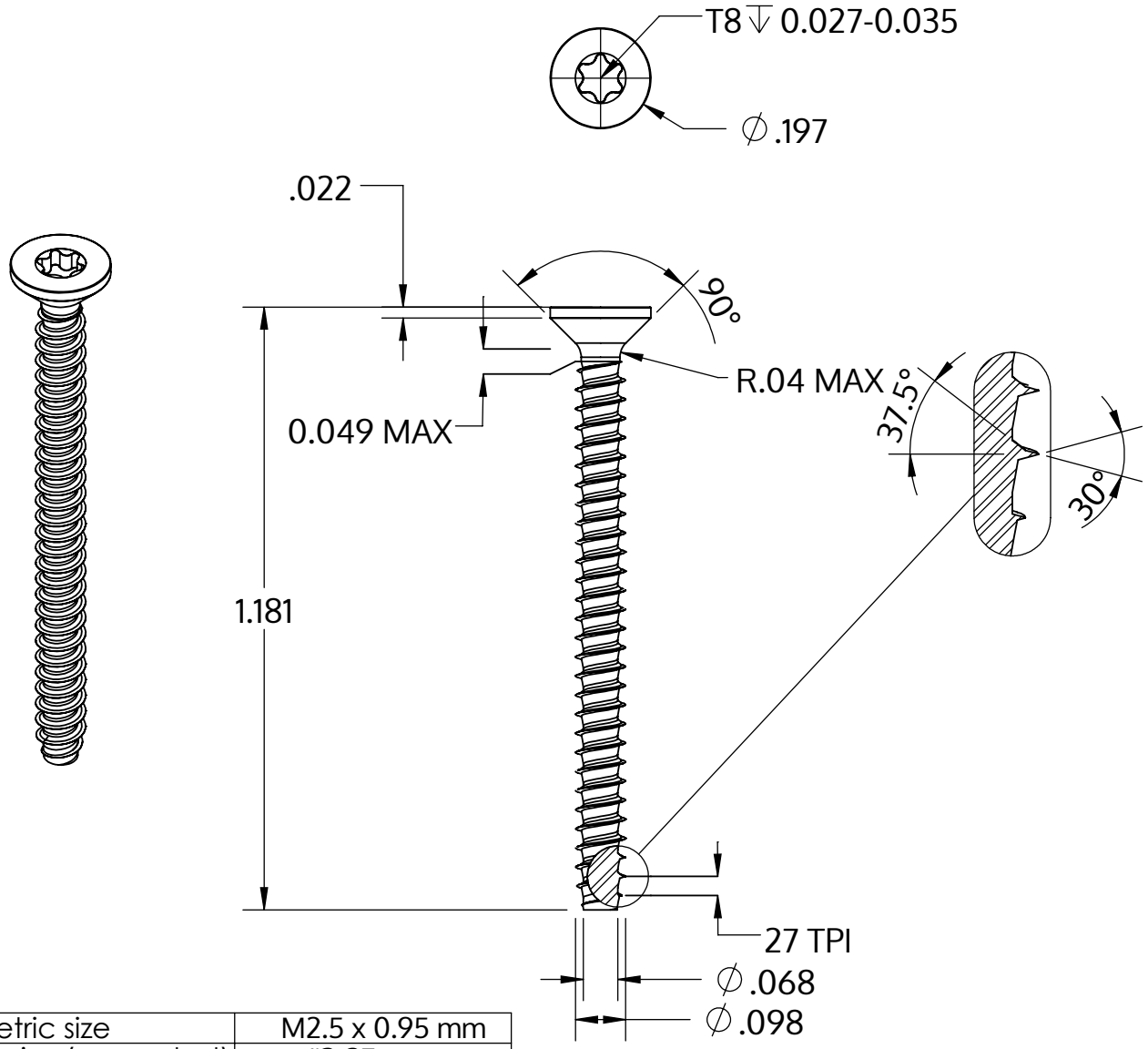


| | |
|---|---|
| Metric size | M2.5 x 0.95 mm |
| US size (converted) | #3-27 |
| | Tolerances [inch] |
| Length | +/- 0.025 |
| Head diameter | +0 / -0.011 |
| Head height | |
| Thread diameter | +0.003 / -0 |

| | |
|---|---|
| Opis | STP41 2.5x30.0 - T8 |
| Materiał | Stal, hartowana |
| Powierzchnia | ZiNi czarna-pasywowana, temperowana, uszczelniona |
| Waga | 0.798 kg / 1000 sztuk |

| | | |
|---|---|---|
| SCREWERK | **STP410250300B** | |
| _Zoll Zeichnung Größe A | Skala 3:1 | 2024-10 |