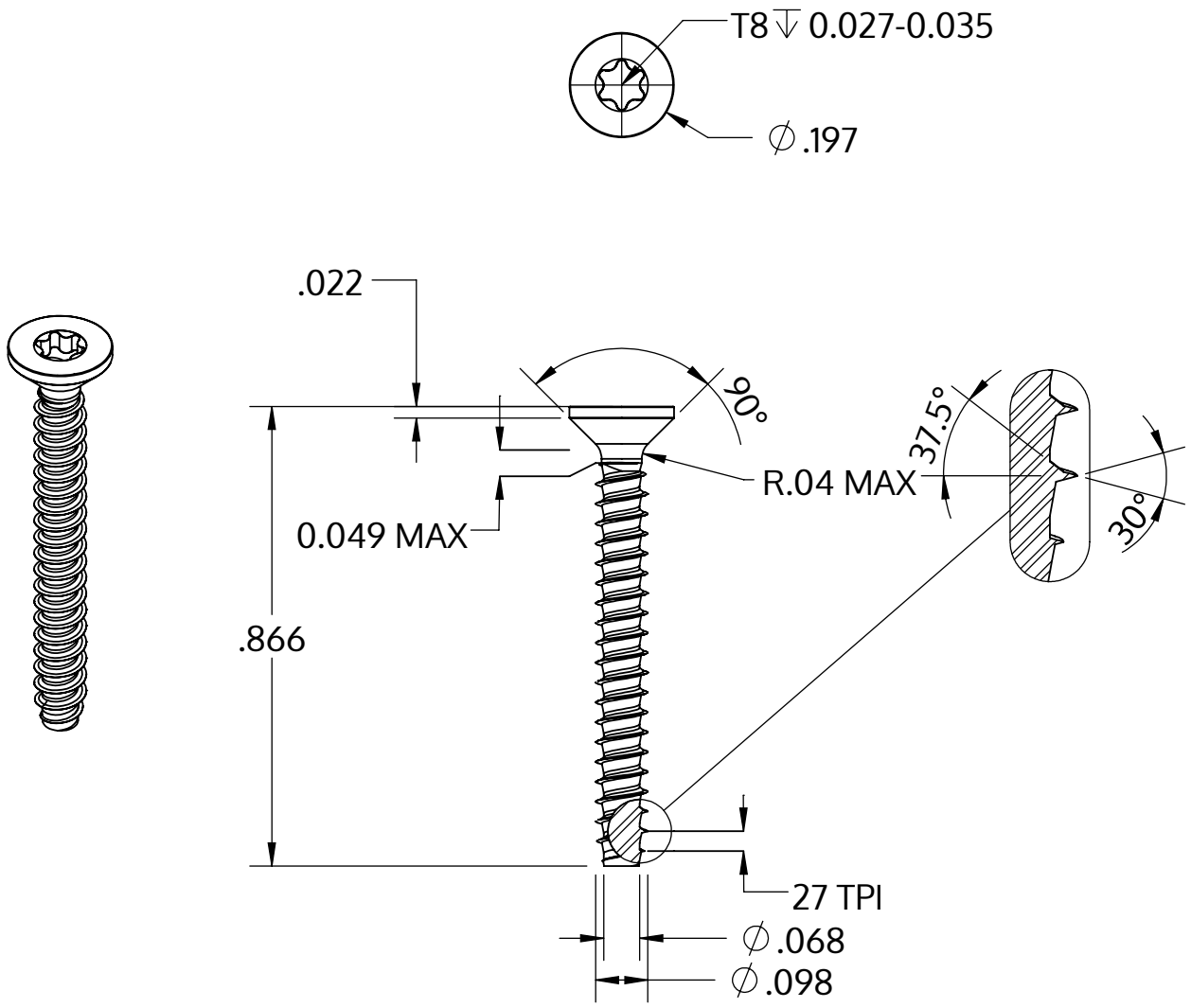

Metric size	M2.5 x 0.95 mm
US size (converted)	#3-27
	Tolerances [inch]
Length	+/- 0.025
Head diameter	+0 / -0.011
Head height	
Thread diameter	+0.003 / -0

Description	STP41 2.5x22.0 - T8
Material	stainless-steel A2
Surface	bright, pickled and passivated
Weight	0.607 kg / 1000 pieces

SCREWERK	**STP410250220E**	
Inch Drawing Size A	Scale None:1	2024-05