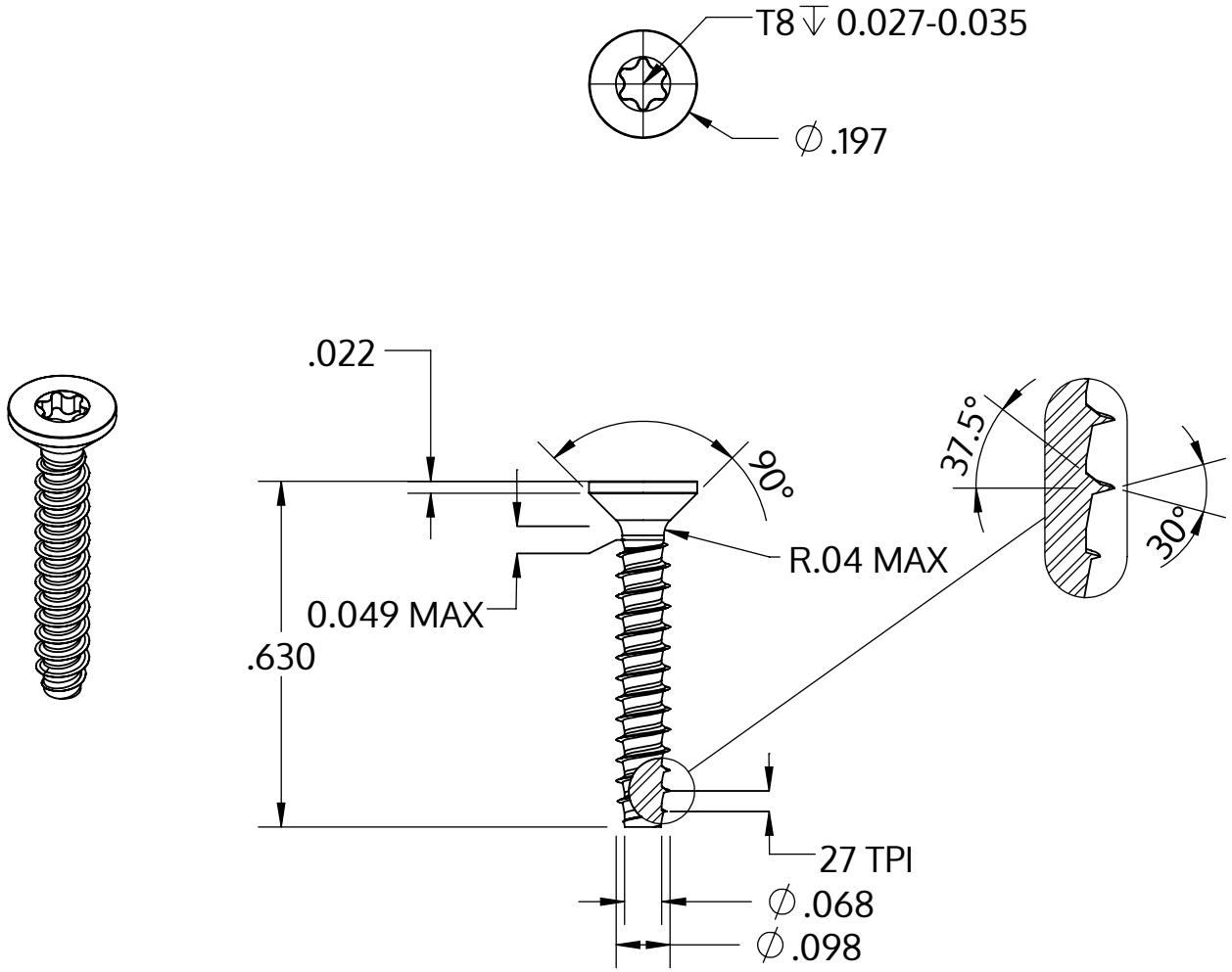

Metric size	M2.5 x 0.95 mm
US size (converted)	#3-27
	Tolerances [inch]
Length	+/- 0.021
Head diameter	+0 / -0.011
Head height	
Thread diameter	+0.003 / -0

Descriere	STP41 2.5x16.0 - T8
Material	oțel, călit
Exterior	zincat 5-7 µm, recopt, pasivat transparent/albastru
Greutate	0.464 kg / 1000 unități

SCREWERK	**STP410250160S**	
_Zoll Zeichnung Größe A	Scalarea 3:1	2024-10