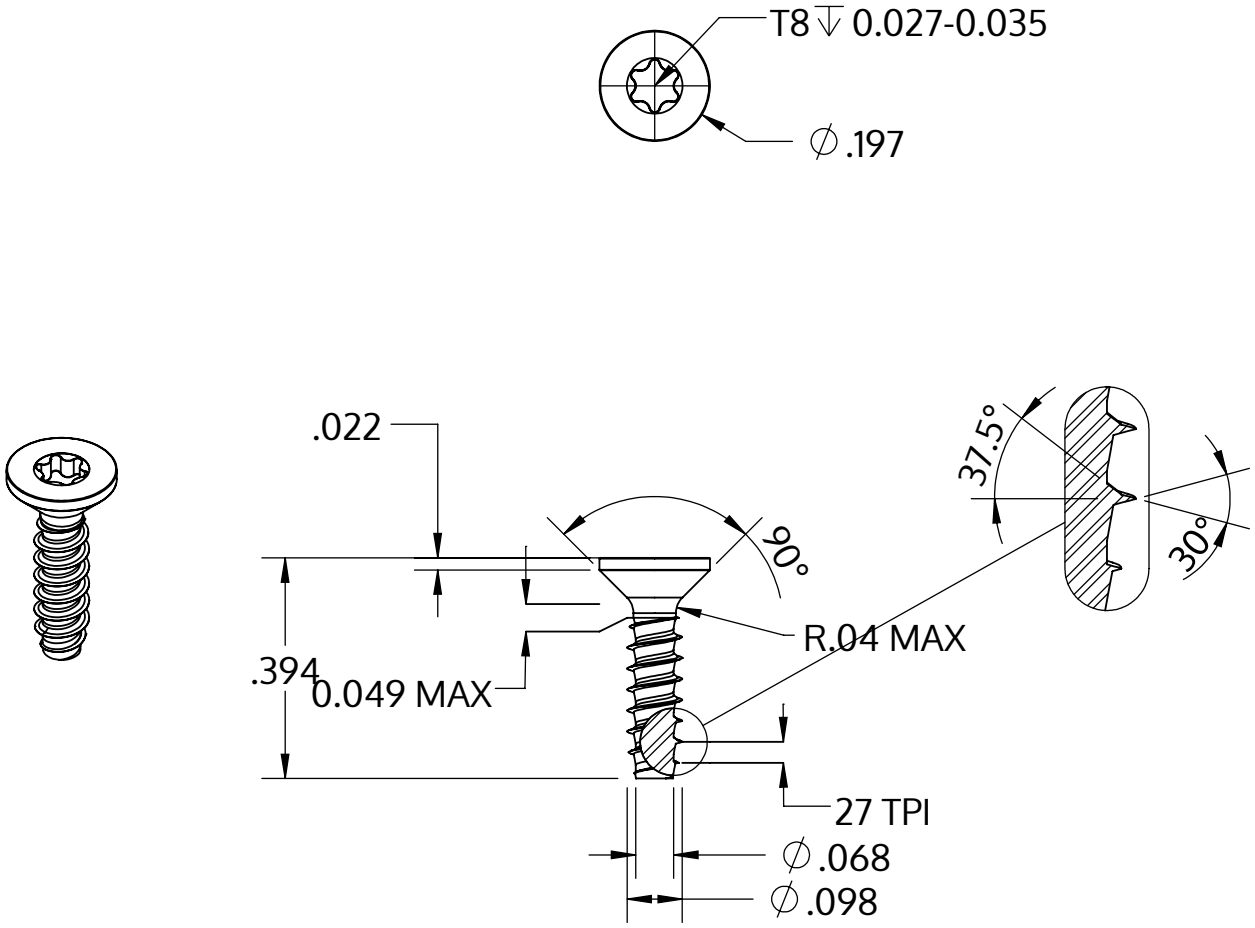

Metric size	M2.5 x 0.95 mm
US size (converted)	#3-27
	Tolerances [inch]
Length	+/- 0.017
Head diameter	+0 / -0.011
Head height	
Thread diameter	+0.003 / -0

Description	STP41 2.5x10.0 - T8
Matière	acier inoxydable A2
Surface	noir
Poids	0.321 kg / 1000 Unité

SCREWERK	**STP410250100J**	
_Zoll Zeichnung Größe A	Redimensionner 3:1	2024-10