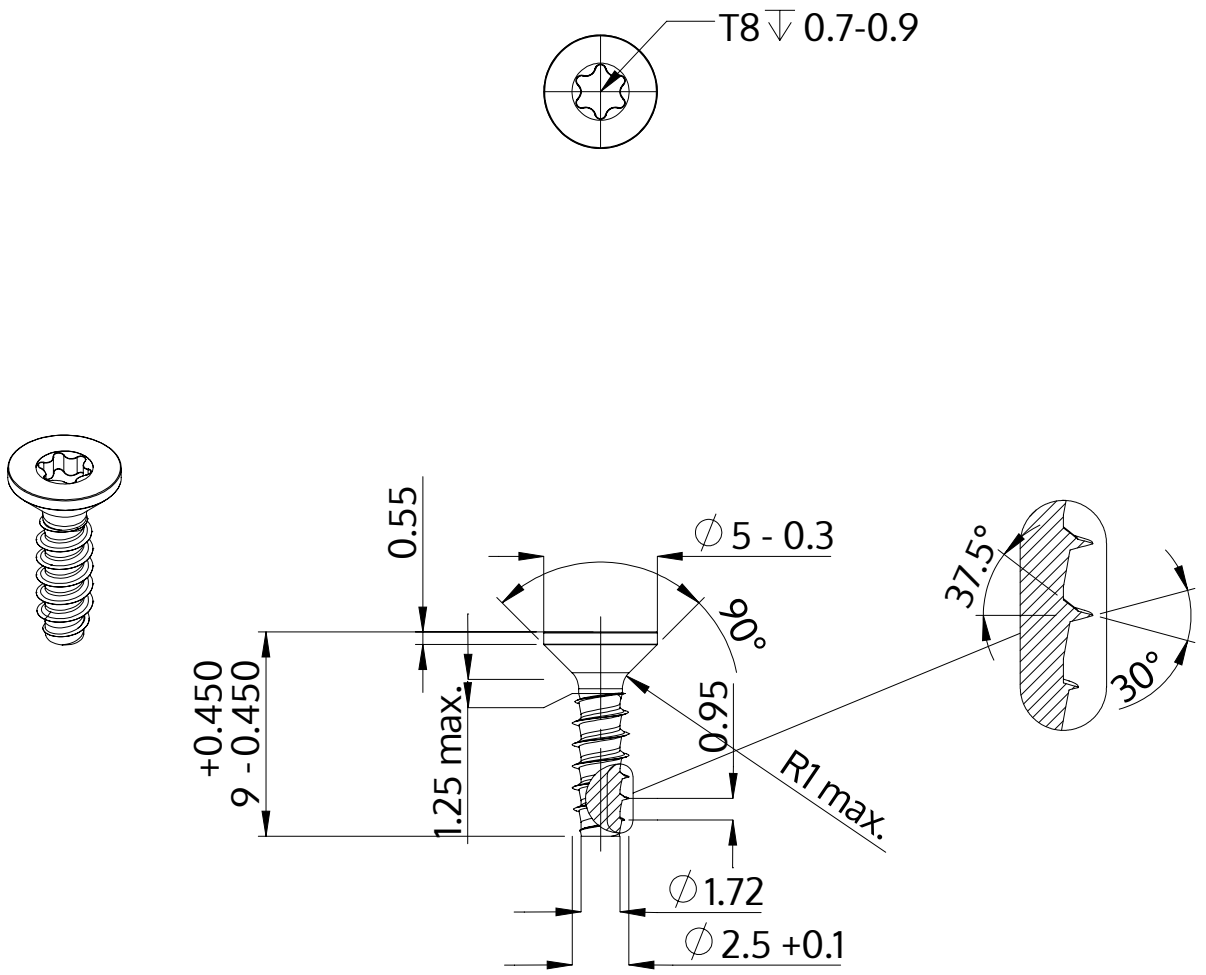

Description	STP41 2.5x9.0 - T8
Material	stainless steel A4
Surface	bright, pickled and passivated
Weight	0.297 kg / 1000 pieces

SCREWERK	**STP410250090C**	
Metric Drawing A4	Scale None:1	2024-04