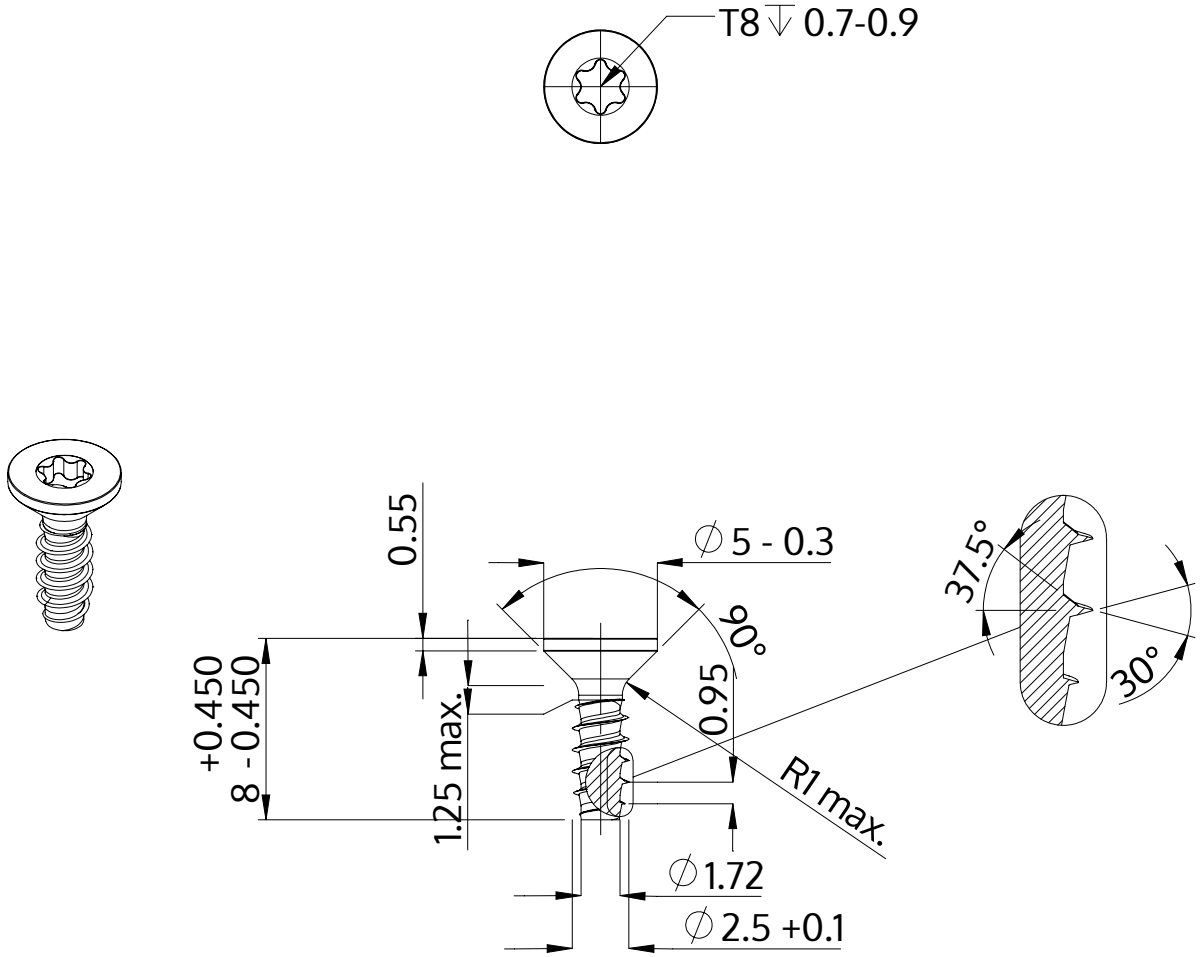

Description	STP41 2.5x8.0 - T8
Material	stainless steel A4
Surface	bright, pickled and passivated
Weight	0.273 kg / 1000 pieces

SCREWERK	**STP410250080C**	
Metric Drawing A4	Scale None:1	2024-04