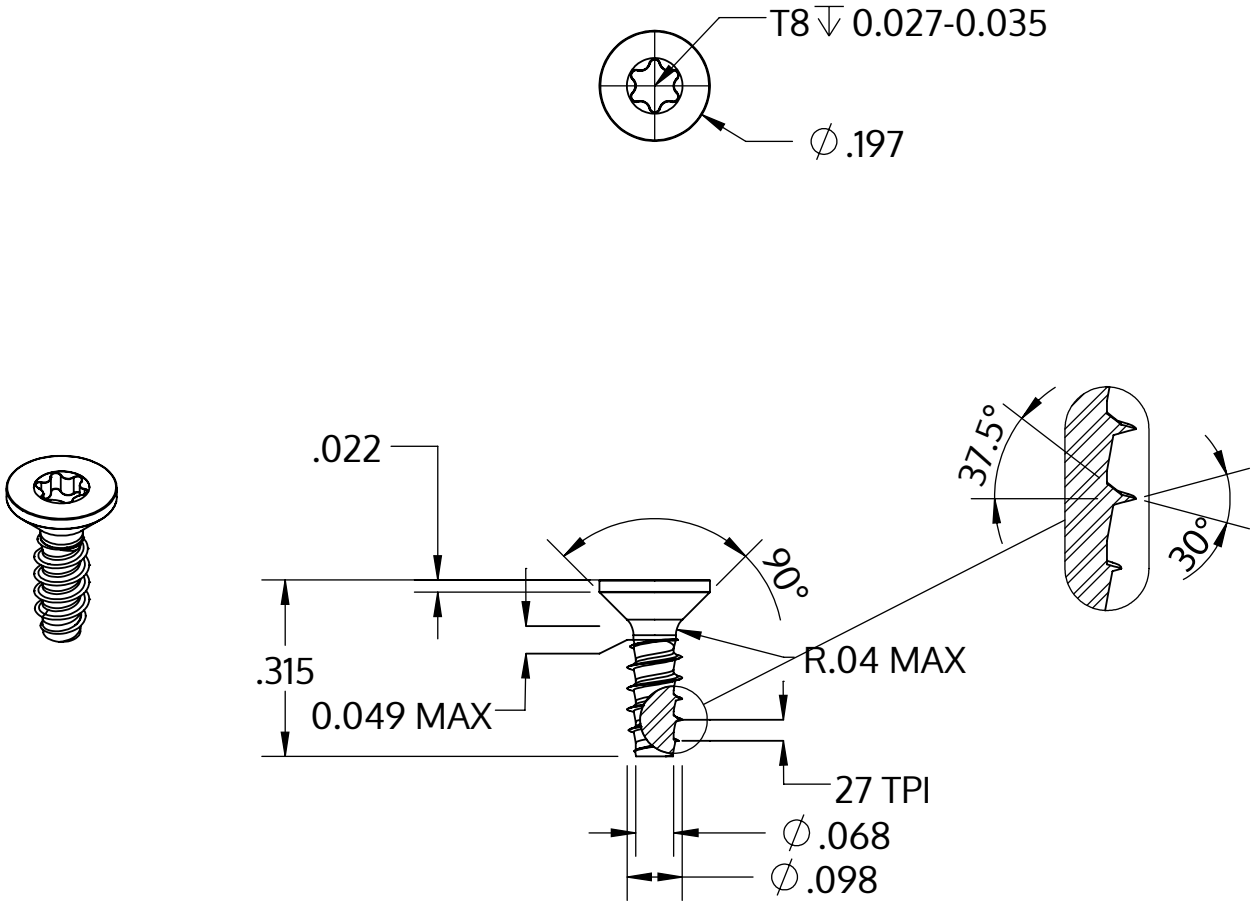

Metric size	M2.5 x 0.95 mm
US size (converted)	#3-27
	Tolerances [inch]
Length	+/- 0.017
Head diameter	+0 / -0.011
Head height	
Thread diameter	+0.003 / -0

Descriere	STP41 2.5x8.0 - T8
Material	oțel, călit
Exterior	zincat, Nichelat, pasivat negru / nu conține Cr-VI, recopt, ermetizat
Greutate	0.273 kg / 1000 unități

SCREWERK	**STP410250080B**	
_Zoll Zeichnung Größe A	Scalarea 3:1	2024-10