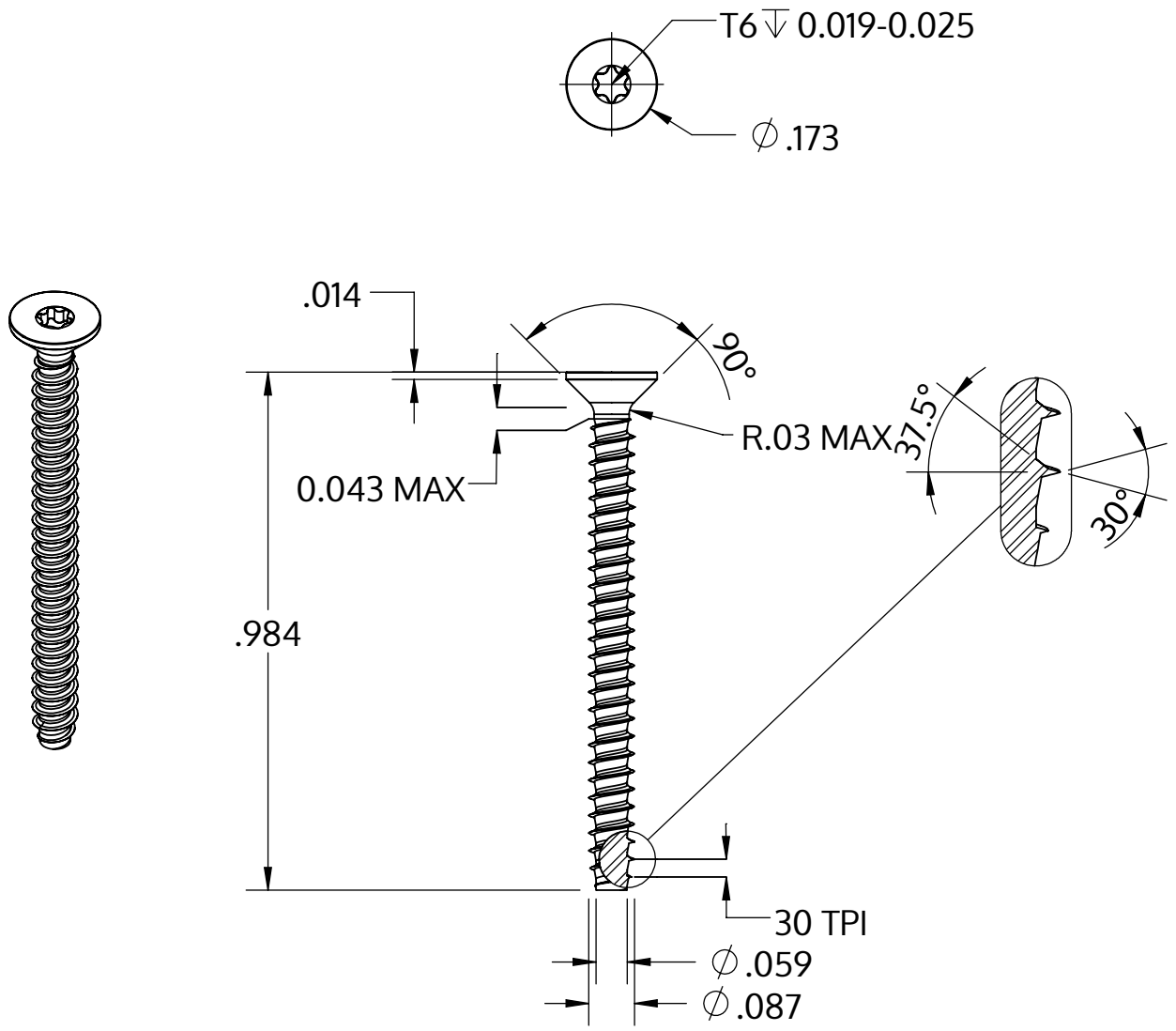

Metric size	M2.2 x 0.85 mm
US size (converted)	#2-30
	Tolerances [inch]
Length	+/- 0.025
Head diameter	+0 / -0.011
Head height	
Thread diameter	+0.003 / -0

Descrizione	STP41 2.2x25.0 - T6
Materiale	acciaio inossidabile A2
Superficie	bianco-decapato e passivato
Peso	0.509 kg / 1000 pezzi

SCREWERK	**STP410220250E**	
_Zoll Zeichnung Größe A	Scala 3:1	2024-10