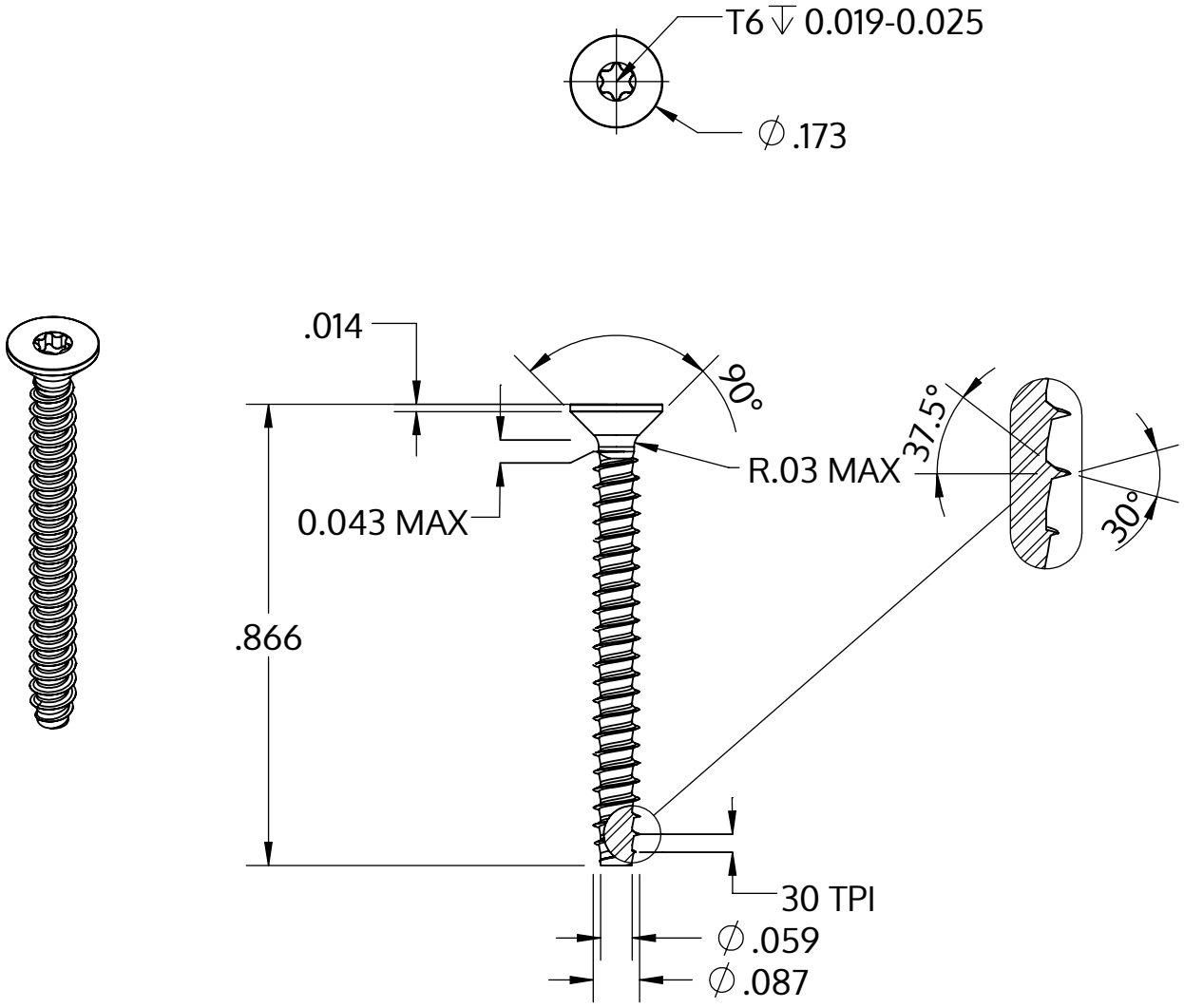


| | |
|---|---|
| Metric size | M2.2 x 0.85 mm |
| US size (converted) | #2-30 |
| | Tolerances [inch] |
| Length | +/- 0.025 |
| Head diameter | +0 / -0.011 |
| Head height | |
| Thread diameter | +0.003 / -0 |

| | |
|---|---|
| Beskrivelse | STP41 2.2x22.0 - T6 |
| Materiale | Ædelstål A2 |
| Overflade | blank, bejdset og passiveret |
| Vægt | 0.454 kg / 1000 stykke |

| | | |
|---|---|---|
| SCREWERK | **STP410220220E** | |
| _Zoll Zeichnung Größe A | Skalering 3:1 | 2024-10 |