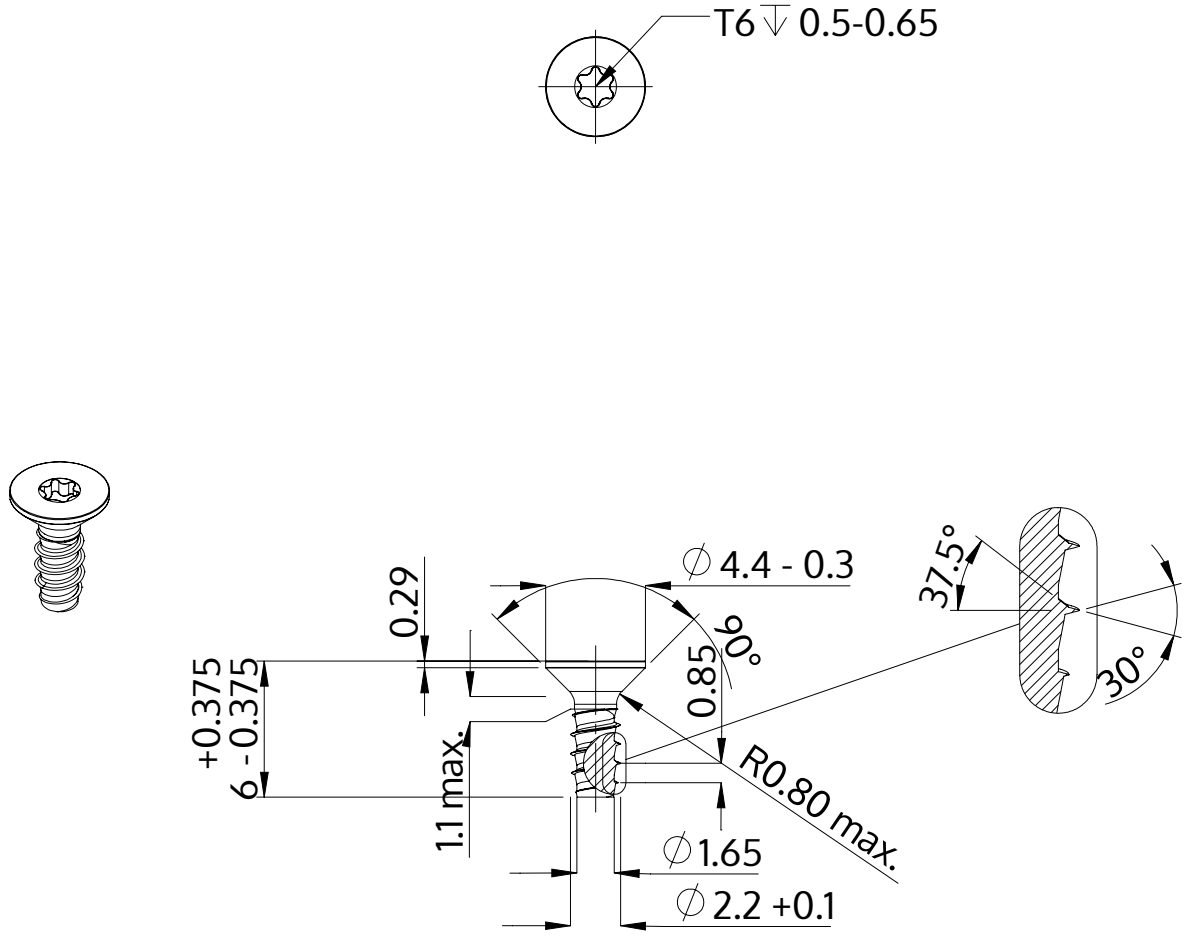

Description	STP41 2.2x6.0 - T6
Material	stainless-steel A2
Surface	bright, pickled and passivated
Weight	0.157 kg / 1000 pieces

SCREWERK	**STP410220060E**	
Metric Drawing A4	Scale 3:1	2024-10