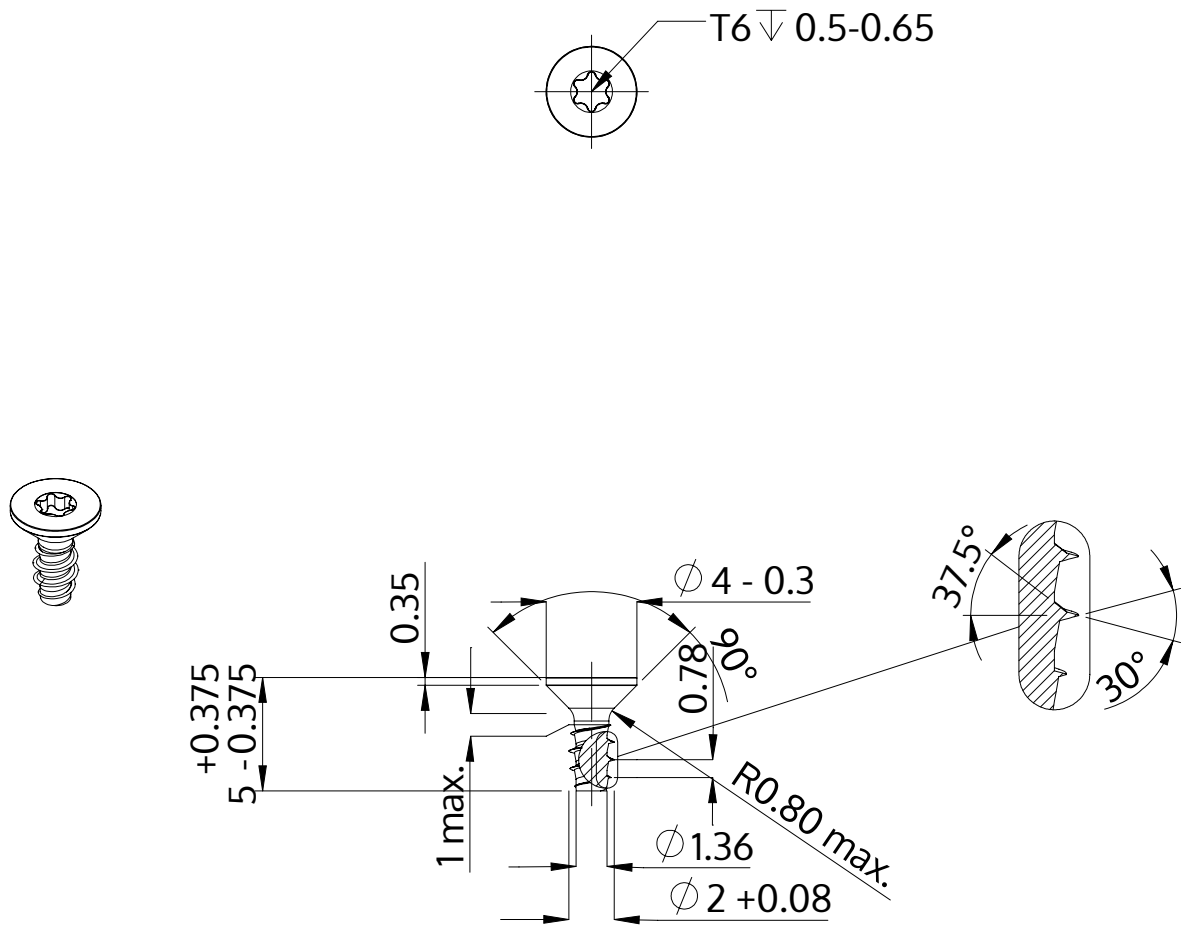

Description	STP41 2.0x5.0 - T6
Material	stainless-steel A2
Surface	bright, pickled and passivated
Weight	0.119 kg / 1000 pieces

SCREWERK	**STP410200050E**	
Metric Drawing A4	Scale None:1	2024-04