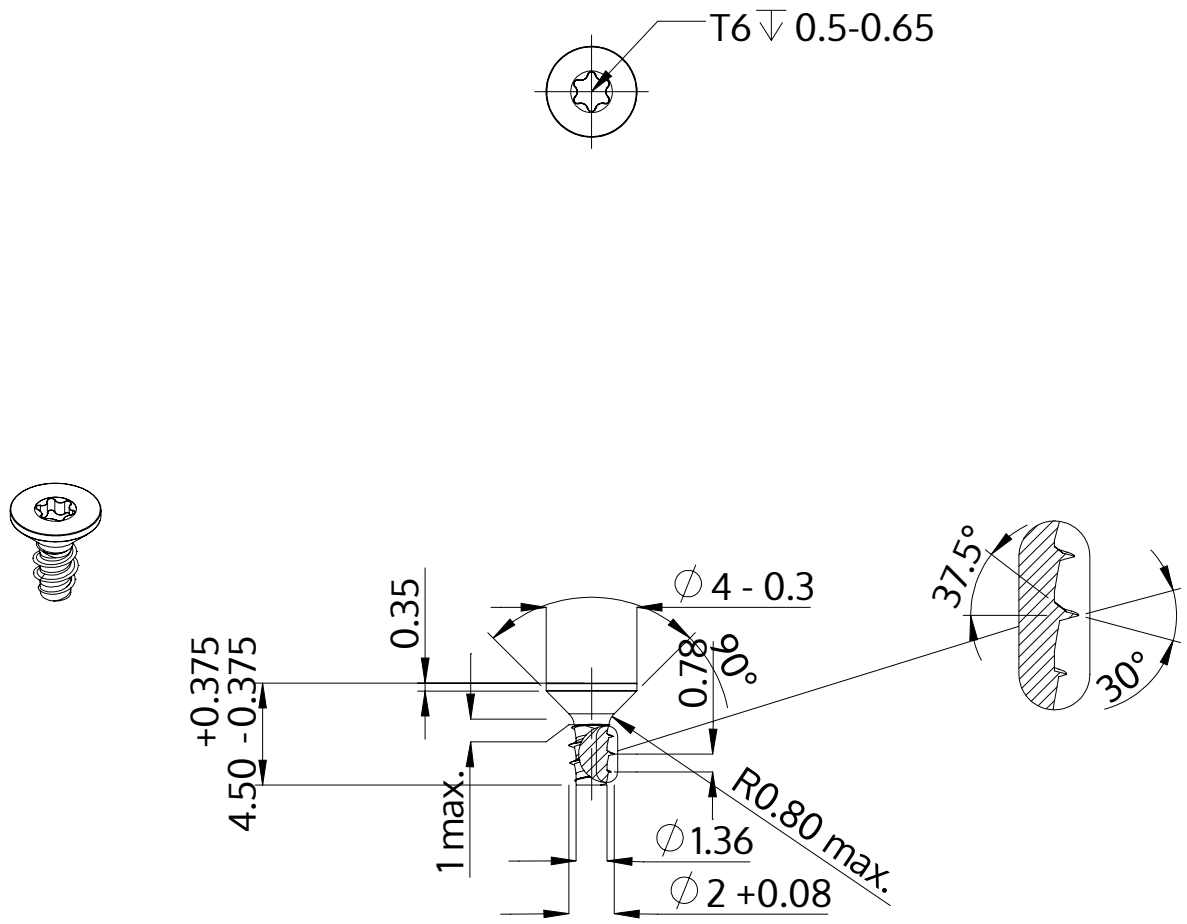

Description	STP41 2.0x4.5 - T6
Material	steel, hardened
Surface	Zinc-Nickel-plated min. 5µm, passivated black/ Cr-VI-free, baked, sealed
Weight	0.111 kg / 1000 pieces

SCREWERK	**STP410200045B**	
Metric Drawing A4	Scale 3:1	2024-10