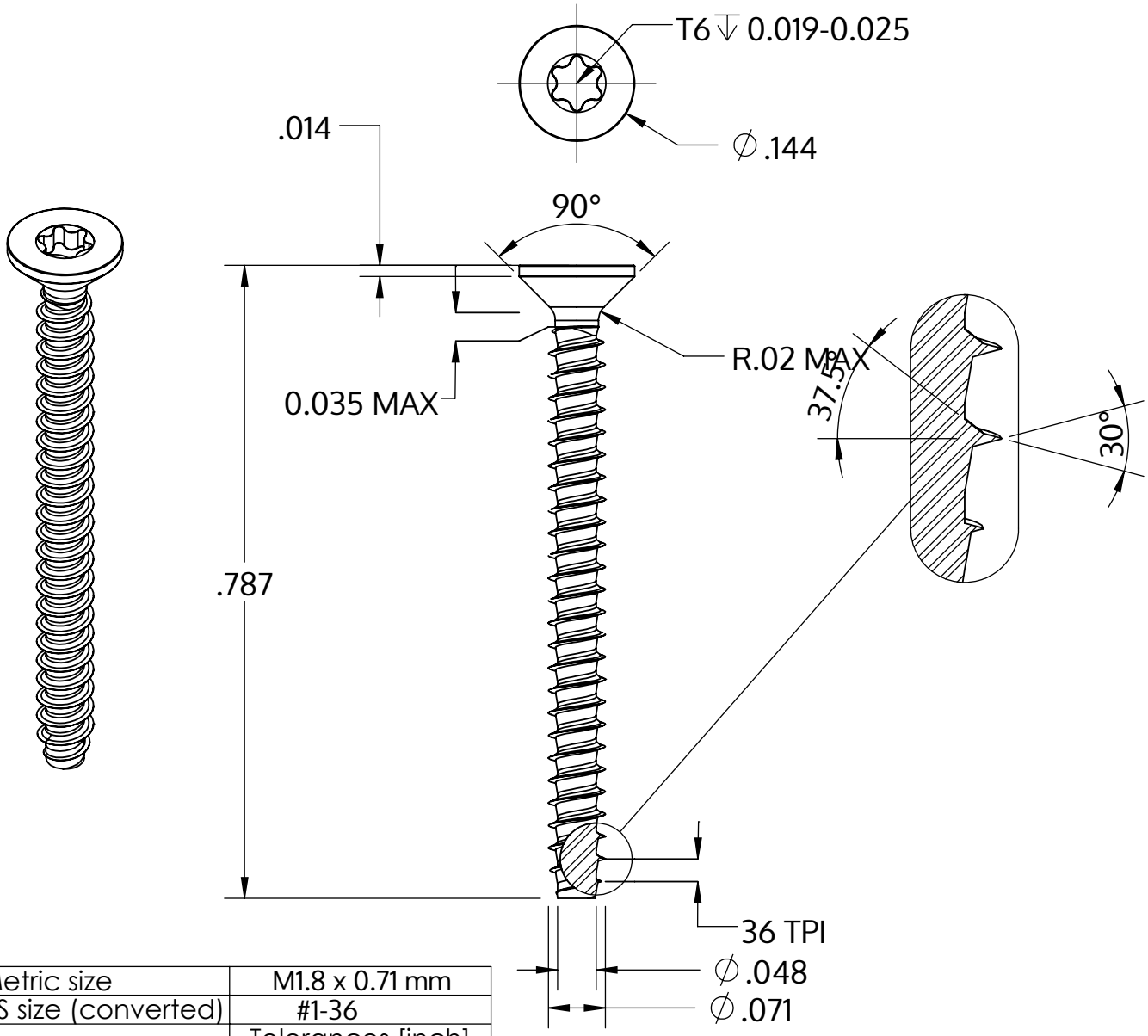

Metric size	M1.8 x 0.71 mm
US size (converted)	#1-36
	Tolerances [inch]
Length	+/- 0.025
Head diameter	+0 / -0.011
Head height	
Thread diameter	+0.003 / -0

Description	STP41 1.8x20.0 - T6
Material	stainless-steel A2
Surface	bright, pickled and passivated
Weight	0.277 kg / 1000 pieces

SCREWERK	**STP410180200E**	
Inch Drawing Size A	Scale None:1	2024-04