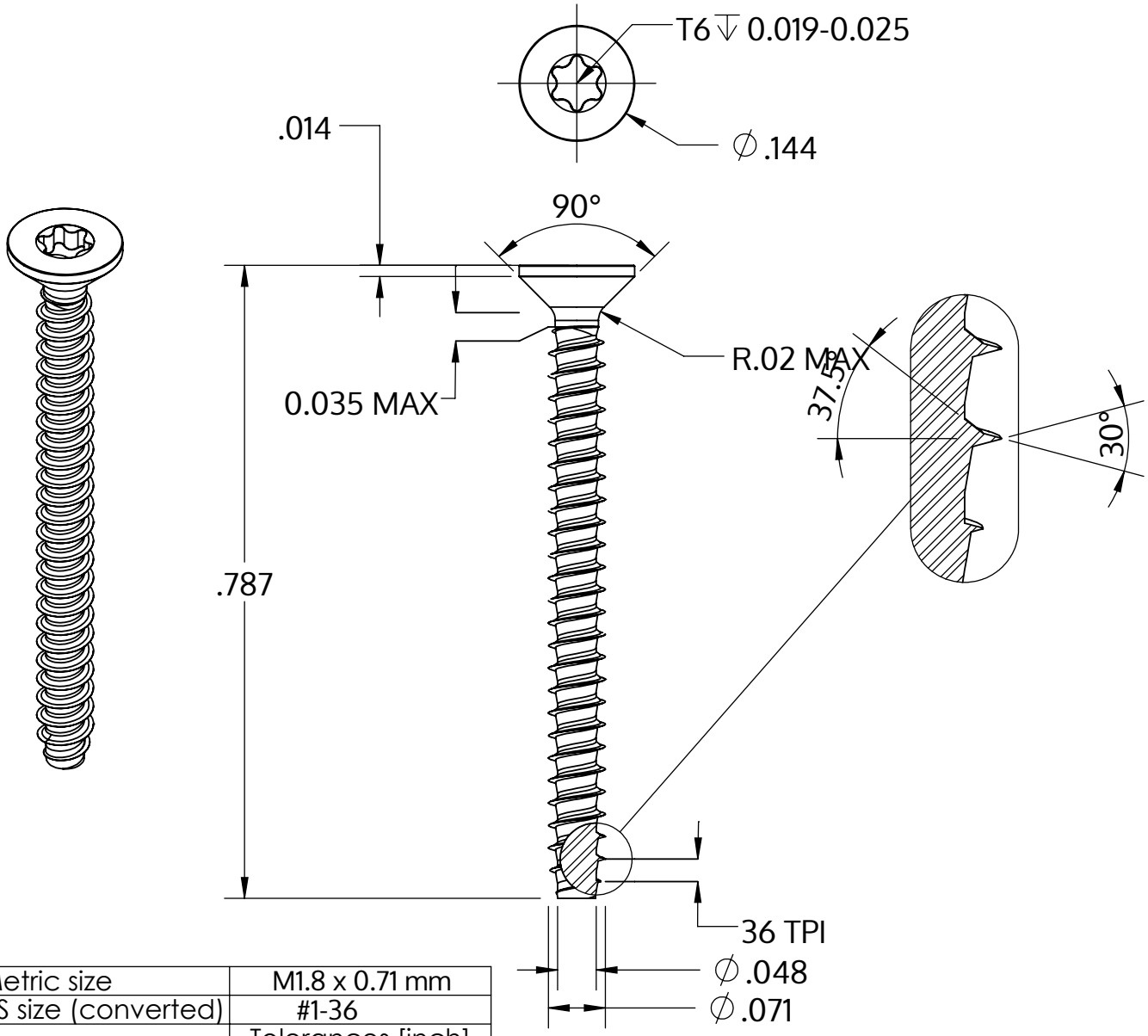

Metric size	M1.8 x 0.71 mm
US size (converted)	#1-36
	Tolerances [inch]
Length	+/- 0.025
Head diameter	+0 / -0.011
Head height	
Thread diameter	+0.003 / -0

Descriere	STP41 1.8x20.0 - T6
Material	oțel, călit
Exterior	zincat, Nichelat, pasivat negru / nu conține Cr-VI, recopt, ermetizat
Greutate	0.277 kg / 1000 unități

SCREWERK	**STP410180200B**	
_Zoll Zeichnung Größe A	Scalarea 5:1	2024-10