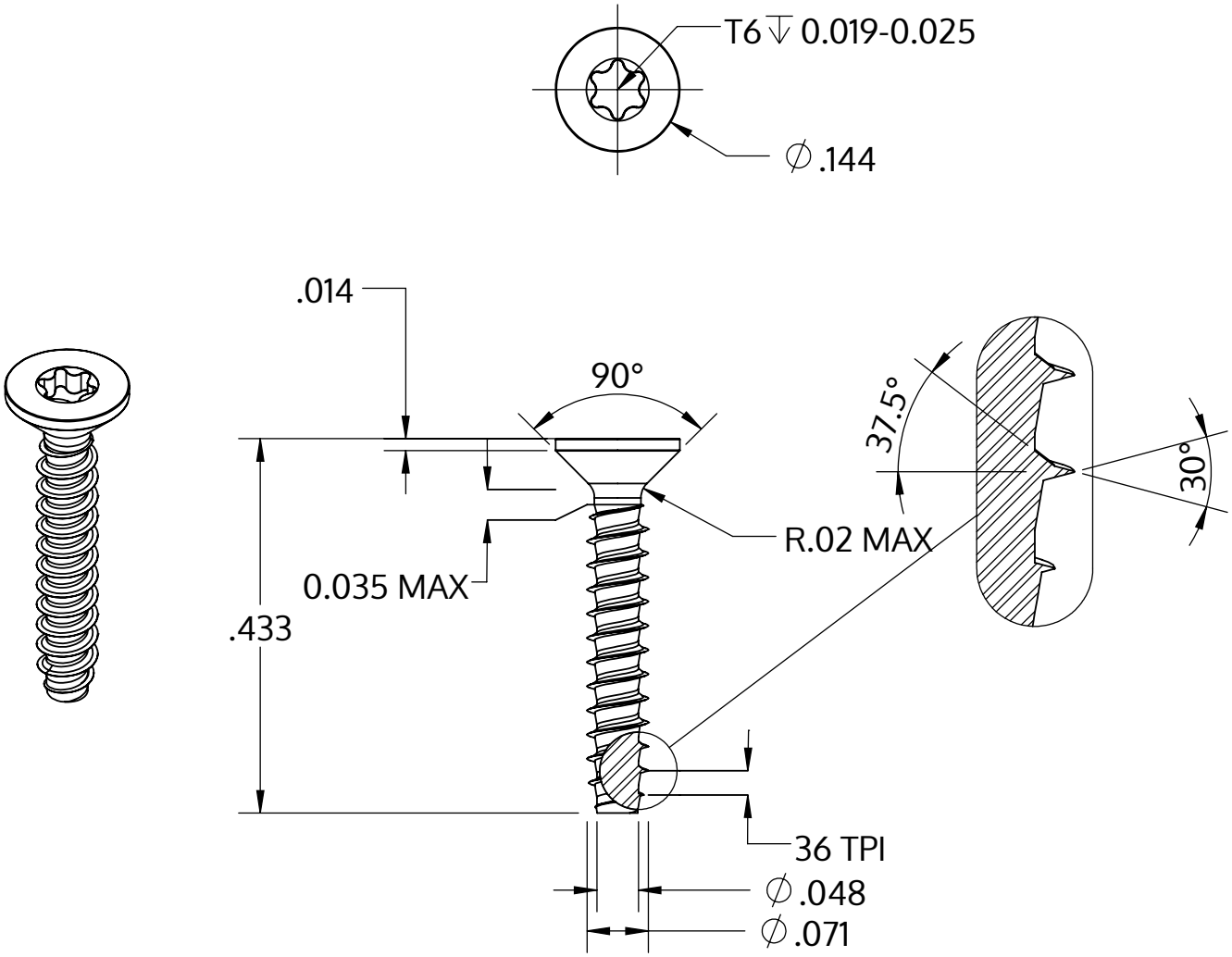


| | |
|---|---|
| Metric size | M1.8 x 0.71 mm |
| US size (converted) | #1-36 |
| | Tolerances [inch] |
| Length | +/- 0.021 |
| Head diameter | +0 / -0.011 |
| Head height | |
| Thread diameter | +0.003 / -0 |

| | |
|---|---|
| Opis | STP41 1.8x11.0 - T6 |
| Materiał | Stal, hartowana |
| Powierzchnia | Ocynkowana 5-7 µm, temperowana, pasywowana na niebiesko |
| Waga | 0.165 kg / 1000 sztuk |

| | | |
|---|---|---|
| SCREWERK | **STP410180110S** | |
| _Zoll Zeichnung Größe A | Skala 5:1 | 2024-10 |