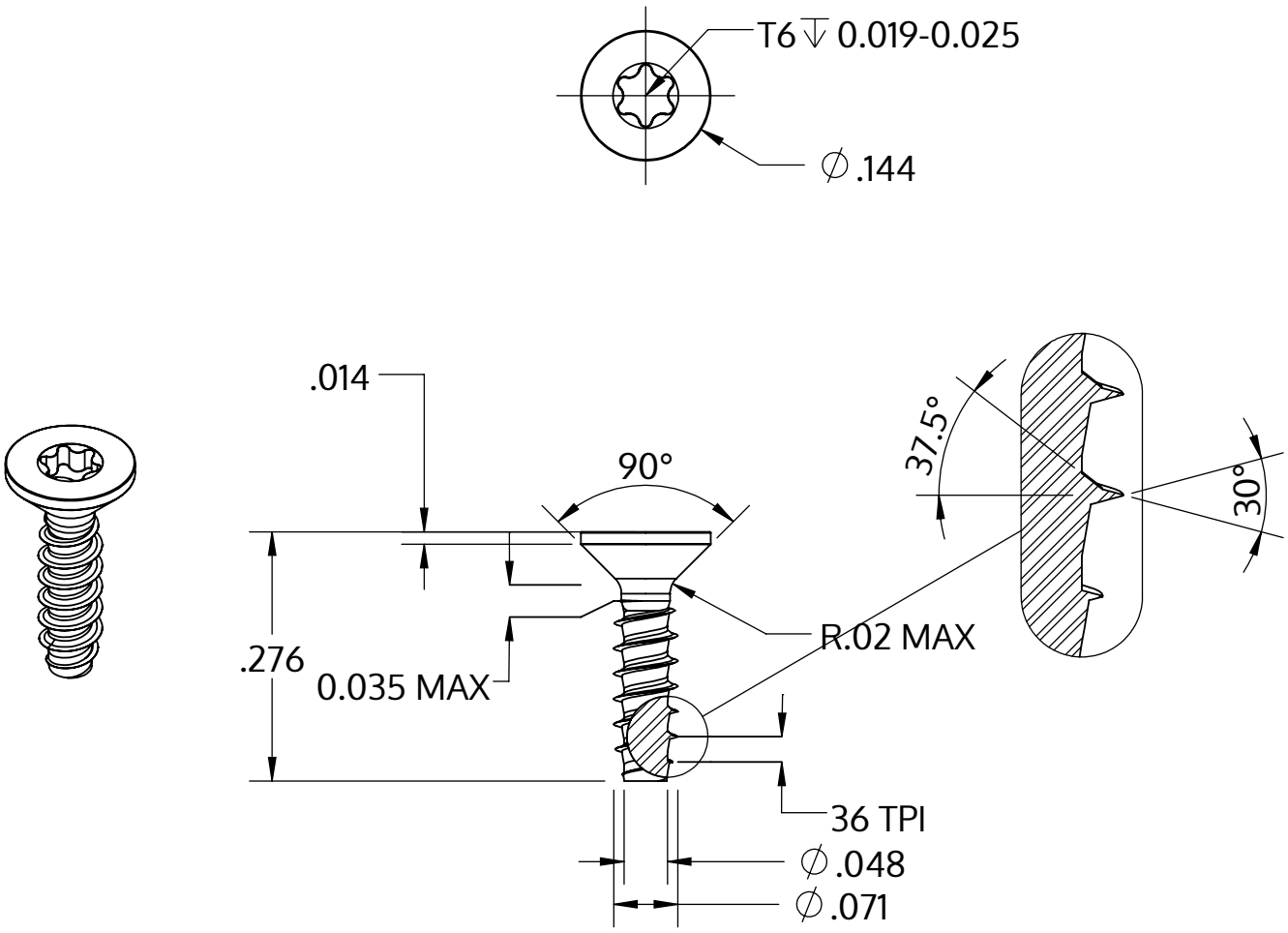


| | |
|---|---|
| Metric size | M1.8 x 0.71 mm |
| US size (converted) | #1-36 |
| | Tolerances [inch] |
| Length | +/- 0.017 |
| Head diameter | +0 / -0.011 |
| Head height | |
| Thread diameter | +0.003 / -0 |

| | |
|---|---|
| Beschrijving | STP41 1.8x7.0 - T6 |
| Materiaal | veredeld staal |
| Oppervlak | verzinkt 5-7 µm, getempert, blauw / transparant gepassiveerd |
| Gewicht | 0.115 kg / 1000 stuk |

| | | |
|---|---|---|
| SCREWERK | **STP410180070S** | |
| _Zoll Zeichnung Größe A | Schaal 5:1 | 2024-10 |