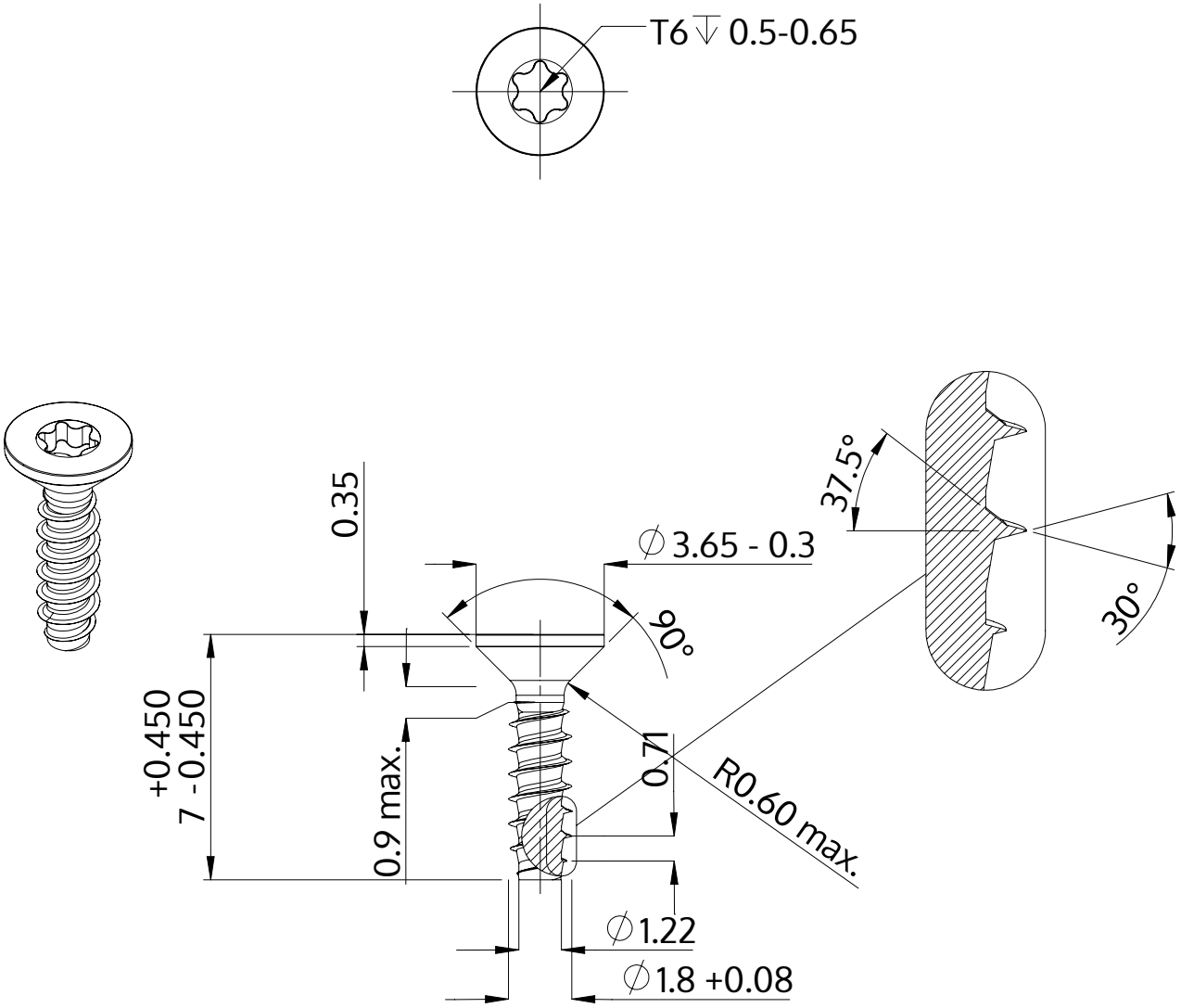

Description	STP41 1.8x7.0 - T6
Material	stainless-steel A2
Surface	bright, pickled and passivated
Weight	0.115 kg / 1000 pieces

SCREWERK	**STP410180070E**	
Metric Drawing A4	Scale 5:1	2024-10