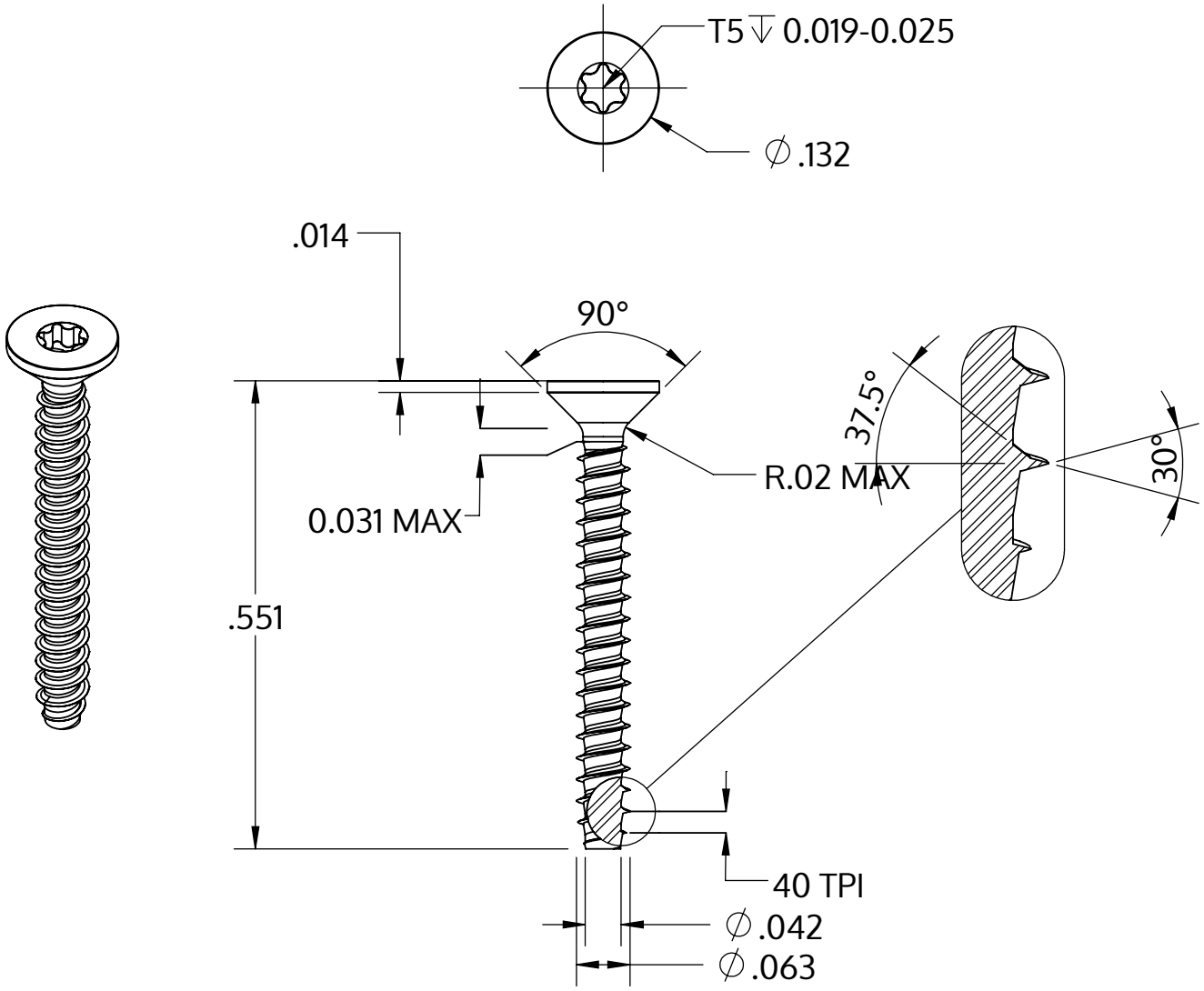

Metric size	M1.6 x 0.64 mm
US size (converted)	#0.5-40
	Tolerances [inch]
Length	+/- 0.021
Head diameter	+0 / -0.011
Head height	
Thread diameter	+0.003 / -0

Descriere	STP41 1.6x14.0 - T5
Material	oțel, călit
Exterior	zincat 5-7 µm, recopt, pasivat transparent/albastru
Greutate	0.162 kg / 1000 unități

SCREWERK	**STP410160140S**	
_Zoll Zeichnung Größe A	Scalarea 5:1	2024-10