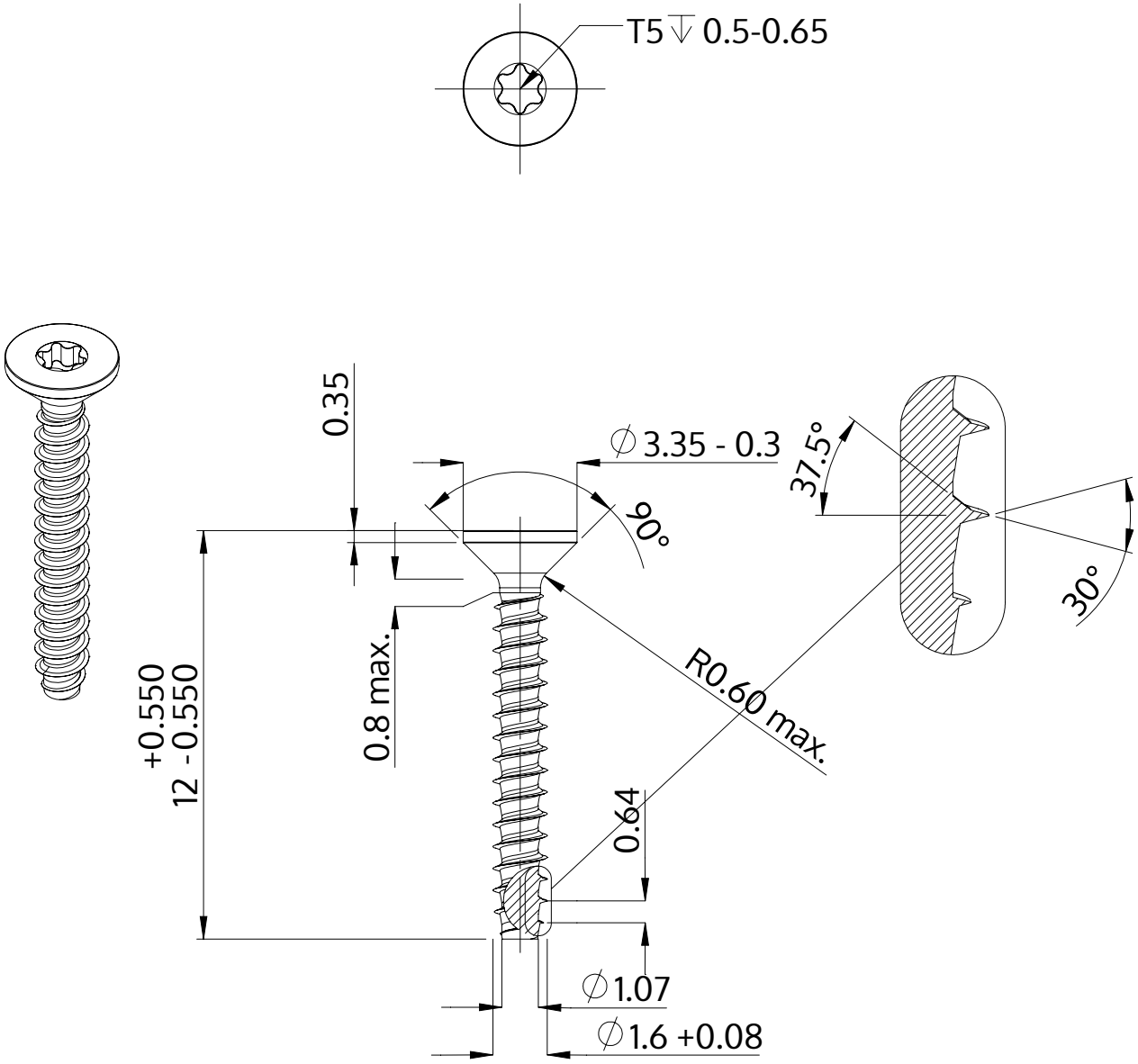

Description	STP41 1.6x12.0 - T5
Material	steel, hardened
Surface	zinc-plated 5-7 µm, baked, blue / transparent passivated
Weight	0.143 kg / 1000 pieces

SCREWERK	**STP410160120S**	
Metric Drawing A4	Scale None:1	2024-04