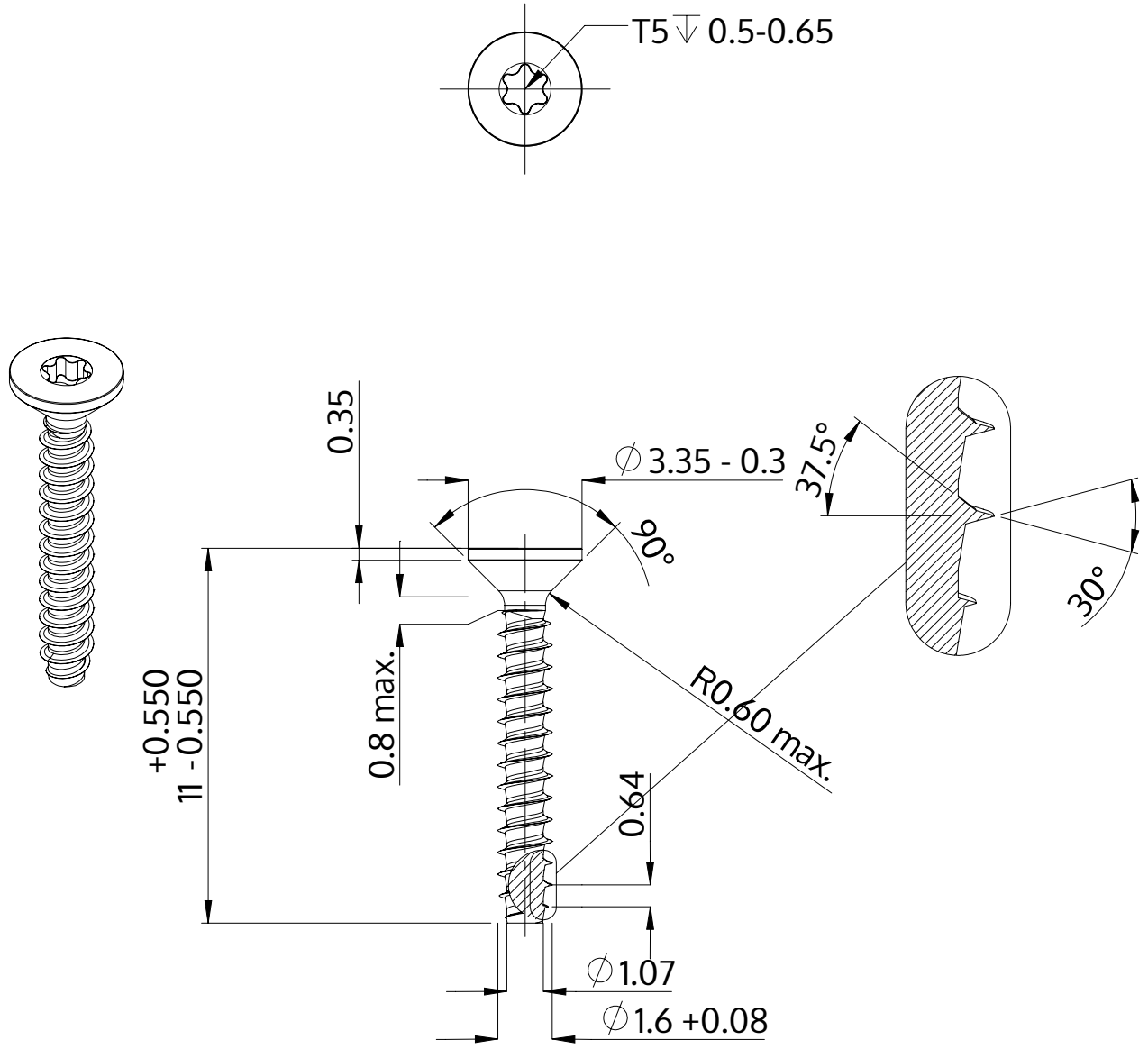

Description	STP41 1.6x11.0 - T5
Material	steel, hardened
Surface	zinc-plated 5-7 µm, baked, blue / transparent passivated
Weight	0.133 kg / 1000 pieces

SCREWERK	**STP410160110S**	
Metric Drawing A4	Scale None:1	2024-04