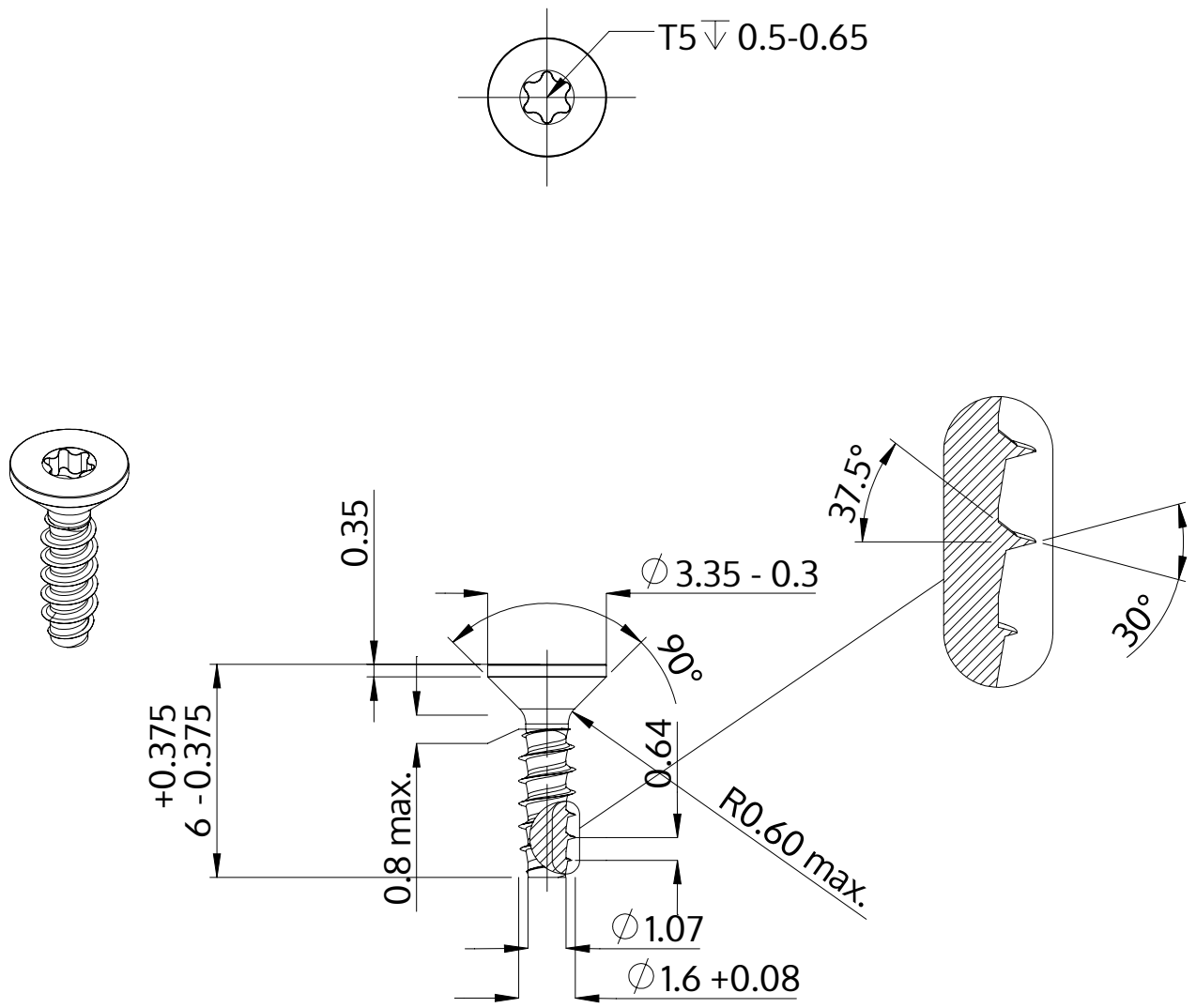

Description	STP41 1.6x6.0 - T5
Material	stainless-steel A2
Surface	bright, pickled and passivated
Weight	0.083 kg / 1000 pieces

SCREWERK	**STP410160060E**	
Metric Drawing A4	Scale None:1	2024-04