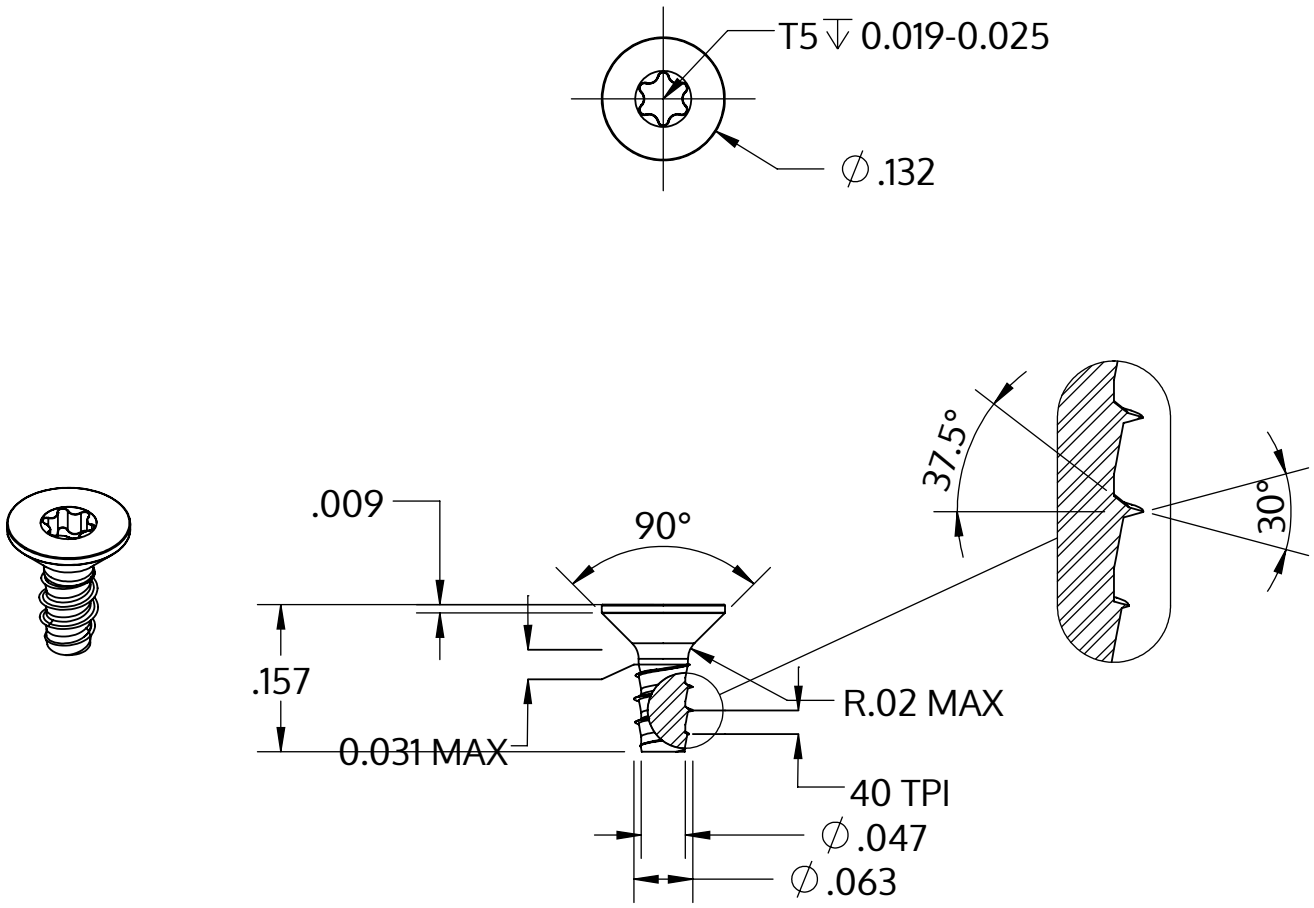

Metric size	M1.6 x 0.64 mm
US size (converted)	#0.062-40
	Tolerances [inch]
Length	+/- 0.014
Head diameter	+0 / -0.011
Head height	
Thread diameter	+0.003 / -0

Description	STP41 1.6x4.0 - T5
Material	steel, hardened
Surface	zinc-plated 5-7 µm, baked, blue / transparent passivated
Weight	0.064 kg / 1000 pieces

SCREWERK	**STP410160040S**	
Inch Drawing Size A	Scale 5:1	2024-10