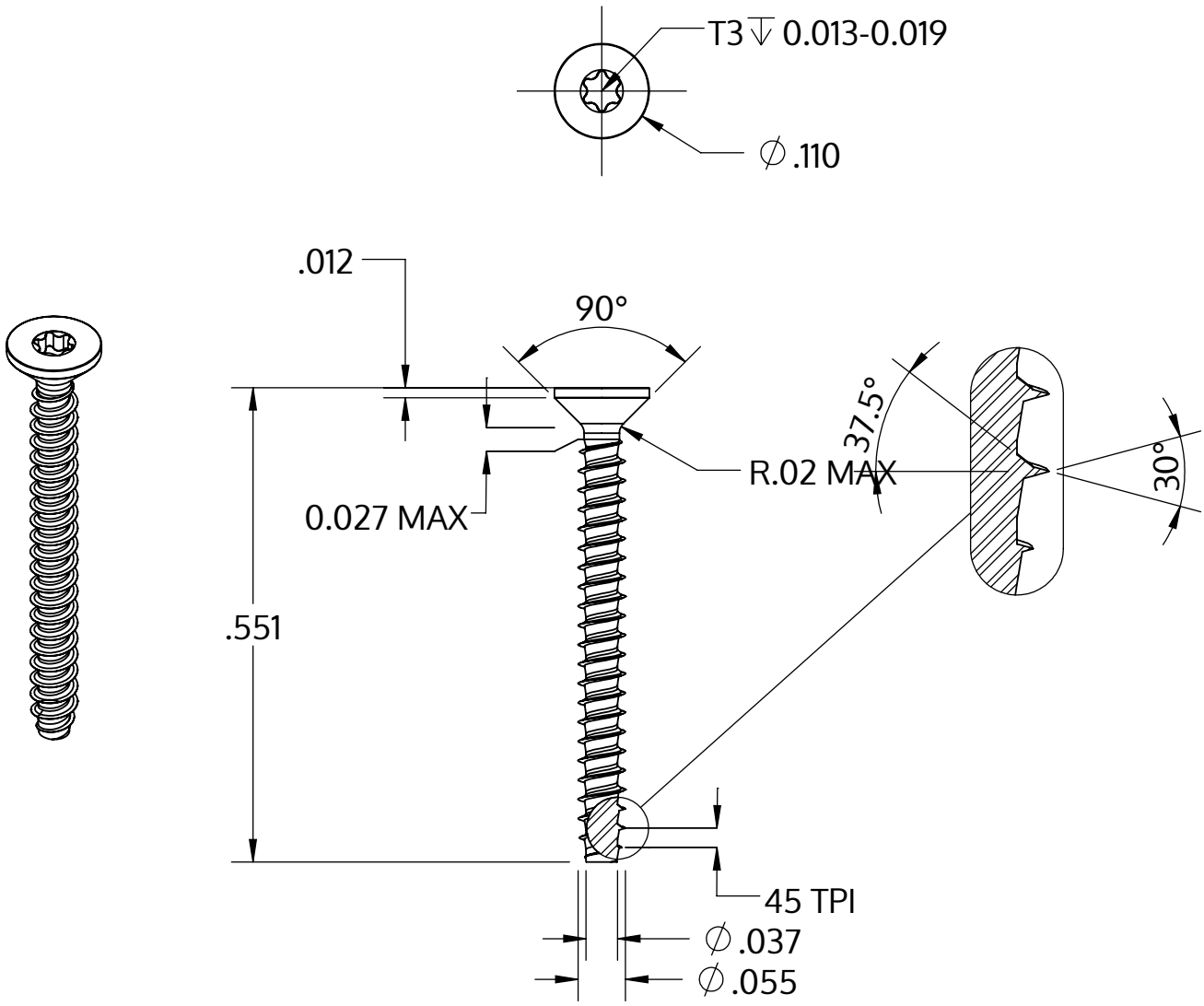

Metric size	M1.4 x 0.57 mm
US size (converted)	#0-45
	Tolerances [inch]
Length	+/- 0.021
Head diameter	+0 / -0.009
Head height	
Thread diameter	+0.003 / -0

Description	STP41 1.4x14.0 - T3
Material	stainless-steel A2
Surface	bright, pickled and passivated
Weight	0.121 kg / 1000 pieces

SCREWERK	**STP410140140E**	
Inch Drawing Size A	Scale None:1	2024-04