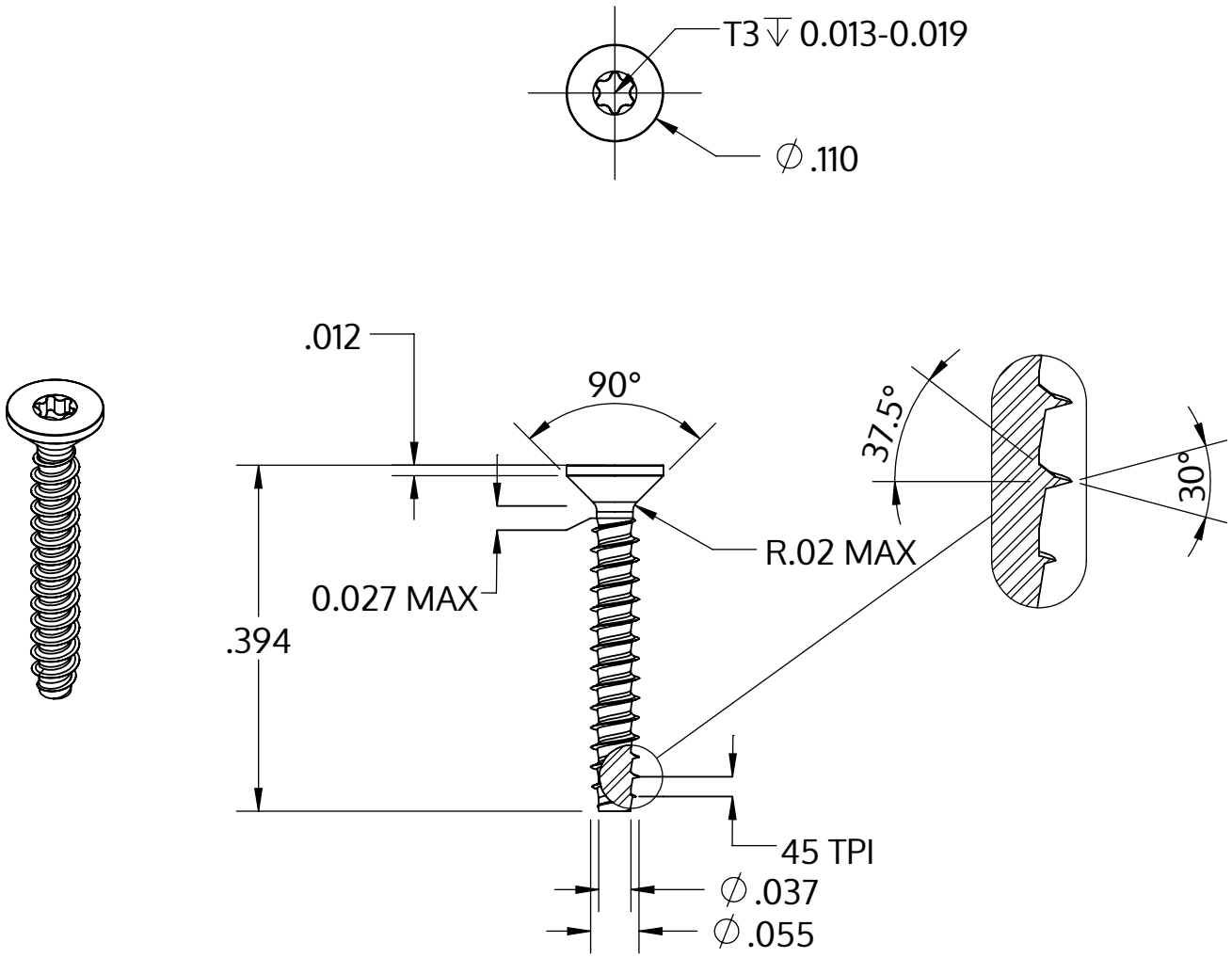


| | |
|---|---|
| Metric size | M1.4 x 0.57 mm |
| US size (converted) | #0-45 |
| | Tolerances [inch] |
| Length | +/- 0.017 |
| Head diameter | +0 / -0.009 |
| Head height | |
| Thread diameter | +0.003 / -0 |

| | |
|---|---|
| Description | STP41 1.4x10.0 - T3 |
| Matière | Acier,trempé et revenu |
| Surface | Zinc Nickel passivé noir, trempée, scéllée |
| Poids | 0.091 kg / 1000 Unité |

| | | |
|---|---|---|
| SCREWERK | **STP410140100B** | |
| _Zoll Zeichnung Größe A | Redimensionner 5:1 | 2024-10 |