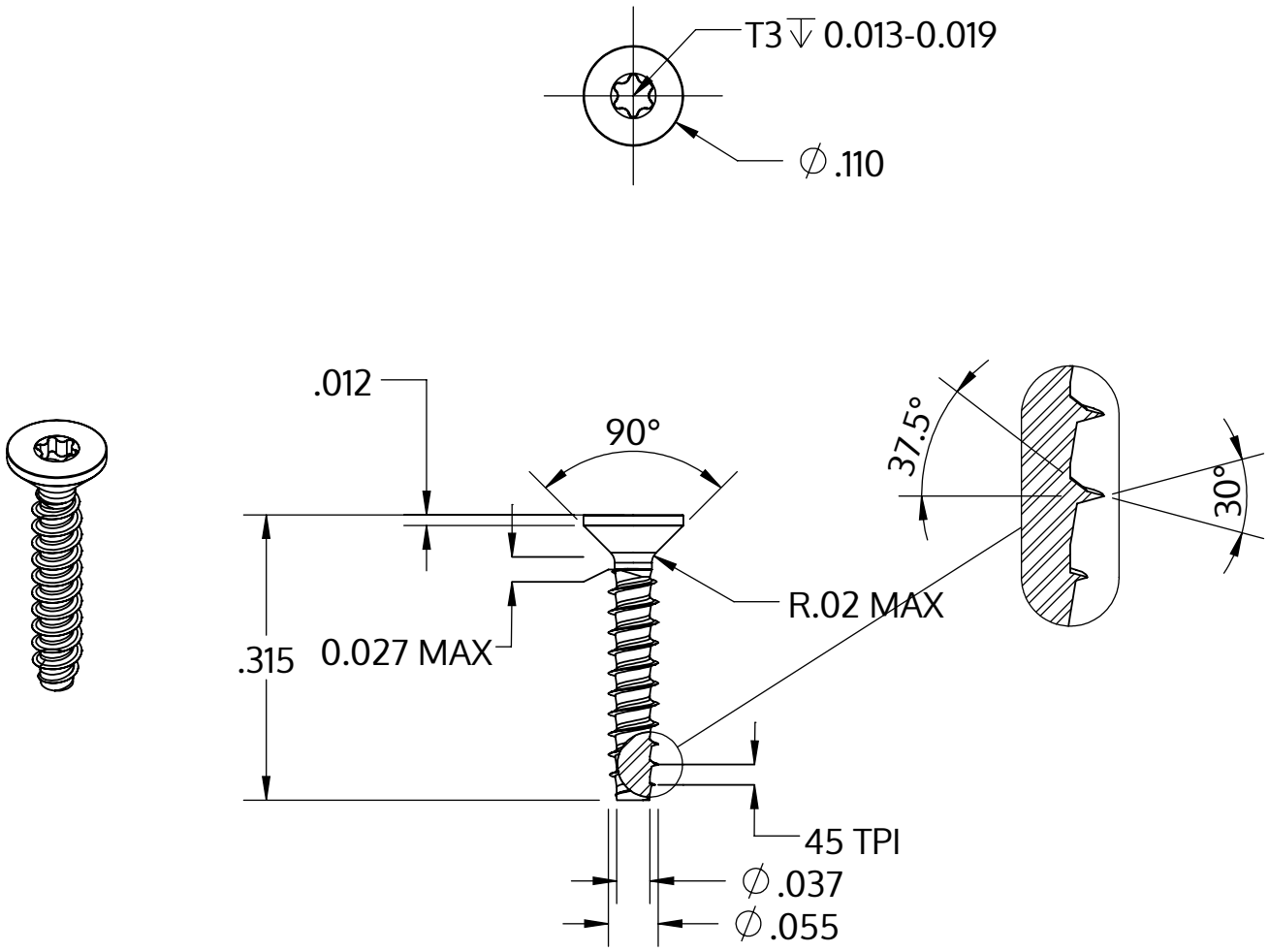


| | |
|---|---|
| Metric size | M1.4 x 0.57 mm |
| US size (converted) | #0-45 |
| | Tolerances [inch] |
| Length | +/- 0.017 |
| Head diameter | +0 / -0.009 |
| Head height | |
| Thread diameter | +0.003 / -0 |

| | |
|---|---|
| Beskrivning | STP41 1.4x8.0 - T3 |
| Material | rostfritt stål A2 |
| Yta | blank och passiviserad |
| Vikt | 0.075 kg / 1000 styck |

| | | |
|---|---|---|
| SCREWERK | **STP410140080E** | |
| _Zoll Zeichnung Größe A | Skala 5:1 | 2024-10 |