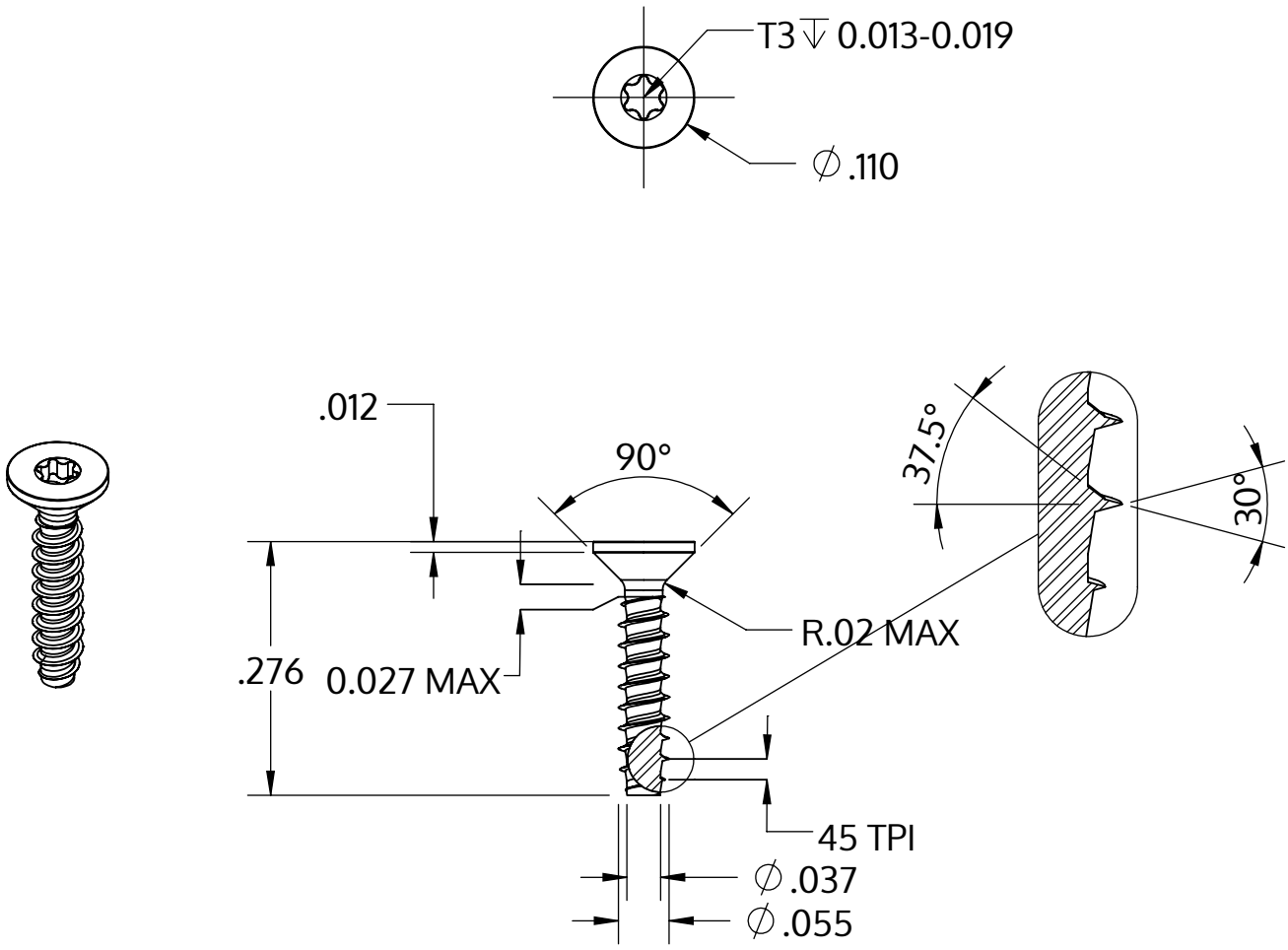

Metric size	M1.4 x 0.57 mm
US size (converted)	#0-45
	Tolerances [inch]
Length	+/- 0.017
Head diameter	+0 / -0.009
Head height	
Thread diameter	+0.003 / -0

Description	STP41 1.4x7.0 - T3
Material	steel, hardened
Surface	Zinc-Nickel-plated min. 5µm, passivated black/ Cr-VI-free, baked, sealed
Weight	0.068 kg / 1000 pieces

SCREWERK	**STP410140070B**	
Inch Drawing Size A	Scale 5:1	2024-10