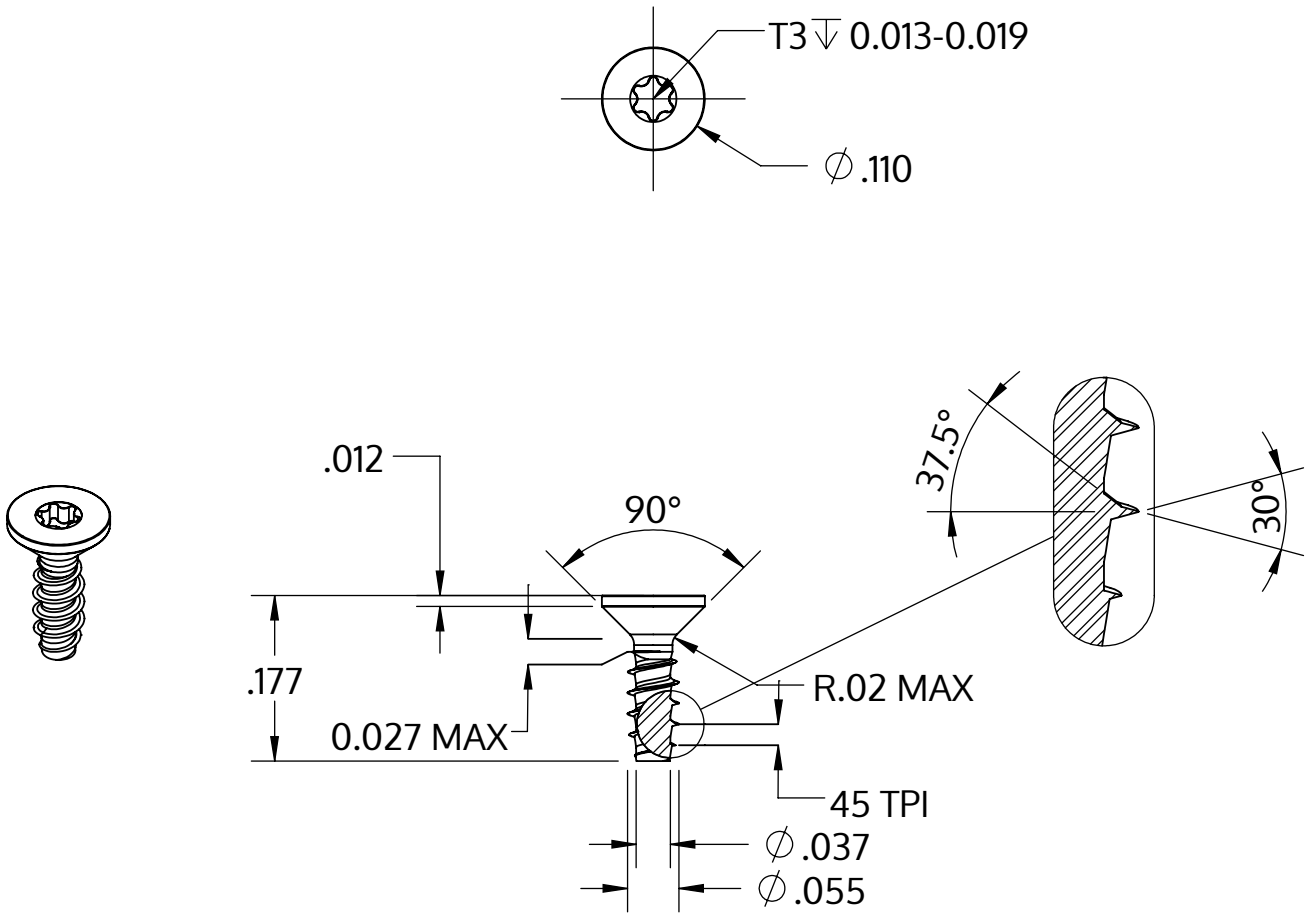

Metric size	M1.4 x 0.57 mm
US size (converted)	#0-45
	Tolerances [inch]
Length	+/- 0.014
Head diameter	+0 / -0.009
Head height	
Thread diameter	+0.003 / -0

Descriere	STP41 1.4x4.5 - T3
Material	oțel, călit
Exterior	zincat, Nichelat, pasivat negru / nu conține Cr-VI, recopt, ermetizat
Greutate	0.049 kg / 1000 unități

SCREWERK	**STP410140045B**	
_Zoll Zeichnung Größe A	Scalarea 5:1	2024-10